Technical Information

Explosion Protection

TI 33Q01J30-01E

YOKOGAWA

Yokogawa Electric Corporation
2-9-32, Nakacho, Musashino-shi, Tokyo, 180-8750 Japan

TI 33Q01J30-01E

31st Edition Jan. 14, 2021 (YK)

Introduction

This book describes explosion protection compliance of CENTUM 3000 and CENTUM VP (hereinafter CENTUM.) Some parts of this book will occupy the general explanation about explosion protections, but it mainly explains what explosion protection complied with CENTUM which is an integrated production control system, and what regulation it has. The product explanation after standard maintenance phase start is leave for safety.

The engineering practice of explosion protection is regulated by each country, and in principle, the wiring and the other methods for construction should be done in accordance with safety standards. When you implement the explosion protection system on the job, select the products as to comply with the standards of the country in which it is used, and the methods for construction should be researched.

Furthermore, this document contains the details of the NFM020-A13, IFM035-A07, NIE008-A101, NIE008-A102, IFM050-A100, NFM035-A100, and NFM036-A101 certificates that are included in the product documentation.

Safety Precautions

Safety, Protection, and Modification of the Product

- In order to protect the system controlled by the product and the product itself and ensure safe operation, observe the safety precautions described in the Technical Information (this book and Installation Guidance) and the User's Manuals. Yokogawa Electric Corporation ("YOKOGAWA") assume no liability for safety if users fail to observe these instructions when operating the product.
- If this product is used in a manner not specified in the Technical Information (this book and Installation Guidance) and the User's Manuals, the protection provided by this product may be impaired.
- If any protection or safety circuit is required for the system controlled by the product or for the product itself, prepare it separately.
- Be sure to use the spare parts approved by YOKOGAWA when replacing parts or consumables.
- Do not use the accessories (Power supply cord set, etc.) that came with the product for any other products.
- Modification of the product is strictly prohibited.
- The following symbols are used in the product and instruction manual to indicate that there are precautions for safety:

⚠	Indicates that caution is required. This symbol for the Product indicates the possibility of dangers such as electric shock on personnel and equipment, and also indicates that the user must refer to the User's Manuals for necessary actions. In the User's Manuals, this symbol is used together with a word "CAUTION" or "WARNING" at the locations where precautions for avoiding dangers are described.
♨	Indicates that caution is required for hot surface. Note that the devices with this symbol become hot. The risk of burn injury or some damages exists if the devices are touched or contacted.
⏚	Identifies a protective conductor terminal. Before using the Product, you must ground the protective conductor terminal to avoid electric shock.
⏚	Identifies a functional grounding terminal. A terminal marked "FG" also has the same function. This terminal is used for grounding other than protective grounding. Before using the Product, you must ground this terminal.
~	Indicates an AC supply.
⎓	Indicates a DC supply.
I	Indicates the ON state. The state of a power on/off switch and others is indicated.
○	Indicates the OFF state. The state of a power on/off switch and others is indicated.

Symbols in this Book

This book has the following symbols.

WARNING

Indicates precautions to avoid a danger that may lead to death or severe injury.

CAUTION

Indicates precautions to avoid a danger that may lead to minor or moderate injury or property damage.

IMPORTANT

Identifies important information required to understand the operations or functions.

TIP

Identifies additional information.

SEE ALSO

Identifies a source to be referred to.

Cautions for Safely Applying the Device

Power Supply Wiring

WARNING

The connection of power cables and the selection of power cables must be done in accordance with this book and the Installation Guidance, and implement so as to comply with the standards and laws about explosion protection in the country or the area where the cables are laid.

Ground Wiring

WARNING

You should implement so as to comply with the standards and laws about explosion protection in the country or the area where the cables are laid.

Input/Output Wiring

CAUTION

The connection of input and output should be done in accordance with this book and the Installation Guidance, and implement so as to comply with the standards and laws about explosion protection in the country or the area where the cables are laid.

- Wiring material and equipment which is electrically connected to this equipment should be products that complied with standards and laws about explosion protection in the country or the area where the cables are laid.

Replacement of fuse

WARNING

- The specified fuse must be used as a replacement.
- Before replacing fuse, confirm if there's no dangerous gas, and the power supply is OFF.

- **Maintenance**

CAUTION

- The maintenance work should be done only by operators who received special training.
- Use a vacuum cleaner and soft cloth to clean up the equipment.
- At the time of the maintenance work, put on wrist straps and take the measures for Electrostatic Discharge (ESD).
- If the label that indicates Danger is not legible, or if it has peeled off, order a new label using part number T9029BX.
- Before starting the maintenance work, confirm if there's no dangerous gas.
- The maintenance work should be done in accordance with the instructions provided in the related Installation Guidance and User's Manuals.

Drawing Conventions

Some drawings depicted in the user's manual may be partially emphasized, simplified, or omitted for the convenience of description.

Trademarks

Trademark Acknowledgment

The names of corporations, organizations, products and logos herein are either registered trademarks or trademarks of Yokogawa Electric Corporation and their respective holders.

CENTUM
Explosion Protection

TI 33Q01J30-01E 31st Edition

CONTENTS

1. Overview of Explosion Protection

This chapter provides the general explanation about explosion protection.

1.1 Primary Explosion Protection and Secondary Explosion Protection

In order to prevent explosions and its danger, plants must have an effective explosion protection. To prevent explosions of plant, as a comprehensive countermeasure, the following steps must be taken.

(1) Step to prevent generating dangerous explosive atmospheres

(2) Step to prevent ignition to explosive atmospheres

(3) Step to limit the influence of explosion within the security area

Steps such as (1) are called Primary explosion protection, Steps such as (2), (3) are called Secondary explosion protection.

■ Primary Explosion Protection

Primary explosion protection is a step to avoid the formation of potentially explosive atmospheres. It includes removing explosive gas and chemically changing explosive gas into non-explosive gas.

■ Secondary Explosion Protection

Secondary explosion protection is a step to keep the influence of explosion to a minimum. In order to prevent the ignition, it pays attention to the electric circuit area of equipment in plant that may cause it. Moreover, if it happens, it prevents the propagation of the influence to the exterior.

CENTUM-compliant explosion protection products are for Secondary explosion protection. The following chapters in this book mostly describe Secondary explosion protection.

1.2 Explosion Protection Standards

ATEX Directive

In Europe, European Community (EC) directive 94/9/EG (March 23, 1994) was issued. This is a new directive about explosion protection in Europe. On all the EC countries, it puts an obligation to pay attention and assure the safety and health mainly for persons. This directive goes by the name of ATEX. As one of the CE marking adaptation directive, it has been compulsory since July 2003. ATEX means “Atmospheres Explosibles” in French, and “Potentially Explosive Atmospheres” in English.

The target of this regulation is also the usage of equipments that are used at hazardous area, and the explosion protection electric equipments/accident prevention systems that are used in potentially explosive atmospheres. Since July 1, 2003, in EC area, although the product complies with ATEX explosion protection standard, in addition to this, it should comply with “ATEX directive” about CE marking, and should have a specific indication. Unless it complies with the directive, the explosion protection products are not allowed to be launched on the market in EU countries. In order to comply with this directive, EN standard is undergoing revisions.

1.3 Classification of Explosion Protection Equipment

Explosion protection equipment is classified as follows:

- Classification by to explosion protection constructions: what kind of method is taken for explosion protection?
- Classification by hazardous area and explosive gas: in what kind of environment are they used?

Classification by Explosion Protection Constructions

Type of explosion protection constructions are listed in the following table.

Table Type of explosion protection constructions

Type of explosion protection constructions	Abbreviation of standard
Flameproof enclosures	Type “d”
Pressurized enclosures	Type “p”
Increased safety	Type “e”
Oil immersion	Type “o”
Intrinsic safety	Type “i”
Powder filling	Type “q”
Encapsulation	Type “m”
Type of protection “n”	Type “n”
Non-Incendive	-

Classified roughly, explosion protection constructions include 4 types of the principle as below.

(1) It isolates the potentially explosive atmospheres from the place where sparks and high temperature arise and prevents explosions. The constructions based on this principle include Pressurized apparatus, Oil immersion, and Encapsulation.

(2) It keeps an explosion within the enclosure, if it is induced there. The constructions based on this principle include Flame-proof enclosures.

(3) Even if sparks and heat is caused by an electric accident at the normal operation, it prevents ignitions of potentially explosive atmospheres. The constructions based on this principle include Increased safety, Type of protection “n”, Non-Incendive.

(4) If an electric accident such as short-circuit, ground fault, and burnout occurs, it doesn’t ignite potentially explosive atmospheres, because of the system which the specific intrinsic safety circuit is installed in. The constructions based on this principle include Intrinsic safety. Intrinsic safety construction has the ia equipment, the ib equipment, and the ic equipment. The ia equipment maintains its performance of explosion protection even if it has two defects, it is able to react Zone 0 (Division 1). The ib equipment maintains its performance of explosion protection even if it has one defect, it is able to react Zone 1 (Division 1). The ic equipment maintains its performance of explosion protection under normal operating conditions only, it is able to react Zone 2 (Division 2).

Definition and Comparison of Explosion Protection Construction

Flame-proof Enclosures (Type “d”)

1) Definition: “Flame-proof enclosures” is totally enclosed construction. When gas or vapor get into the enclosure and an explosion take place, the enclosure withstands the pressure of explosion and prevents the ignition of explosion fire to gas and vapor surrounding the enclosure.

2) Construction

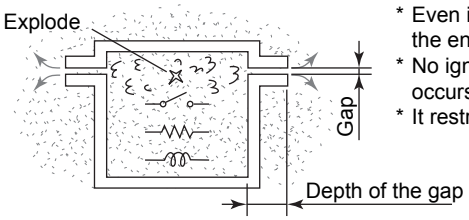

* Even if explosion occurs inside the container, the enclosure withstands it.
* No ignition occurs outside even if explosion occurs inside the container.
* It restricts the surface temperature of the enclosure.

F010301.AI

Figure Flame-proof Enclosures (Type “d”)

Pressurized Apparatus (Type “p”)

1) Definition: “Pressurized apparatus” supplied protective gas such as air, nitrogen, and carbon dioxide into the enclosure, so that gas or vapor doesn’t get into the enclosure.

2) Construction

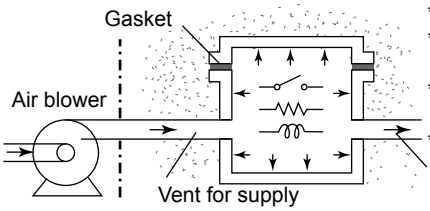

* It increases the internal pressure of the enclosure.
* Protective gas is filled in the container before turning the power on.
* It shuts off the power, when the internal pressure decreases.
* It restricts the surface temperature of the enclosure.

F010302.ai

Figure Pressurized Apparatus (Type “p”)

Increased Safety (Type “e”)

1) Definition: When a part of electric machine and apparatus (except insulating parts), which has no possibility of the creation of sparks or arc, is under normal operation and turned on electricity, “Increased safety” increases the insulation performance and the level of safety for danger of the unacceptable high temperature and the external damage.

2) Construction

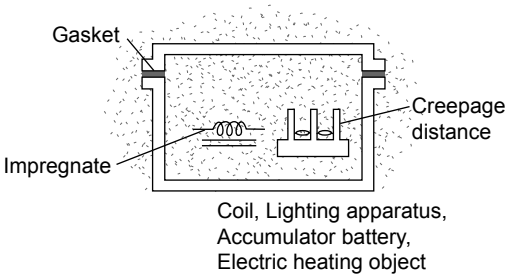

* Measures to increase the level of safety so as not to spark.
  - Coil is impregnated.
  - Wires are connected so as not to slip.
  - Creepage distance/insulation distance is kept.
  - Tracking property of insulating material.
* It restricts the surface temperature of the coil, etc.
* An enclosure catching no dust is used (IP54/IP44).

F010303.ai

Figure Increased Safety (Type “e”)

Oil Immersion (Type “o”)

1) Definition: “Oil immersion” is an explosion protection construction that a part of electric machine and apparatus, which may create sparks or arcs and may become an ignition source by unacceptable high temperature, is immersed in insulating oil, so as not to ignite to gas or vapor.

2) Construction

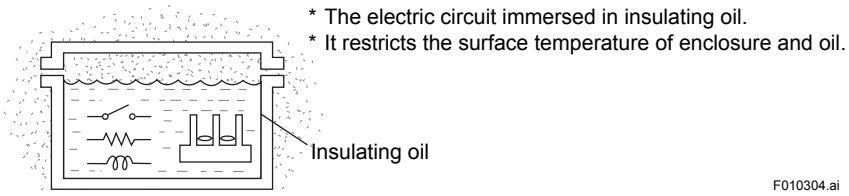

Figure Oil Immersion (Type “o”)

Intrinsic Safety (Type “i”)

1) Definition: “Intrinsic safety” is the explosion protection construction confirmed that the sparks, arcs or heat, which the component part of the electric machine and apparatus create, have no possibility of ignition to gas or vapor, by the spark ignition test and so on.

2) Construction

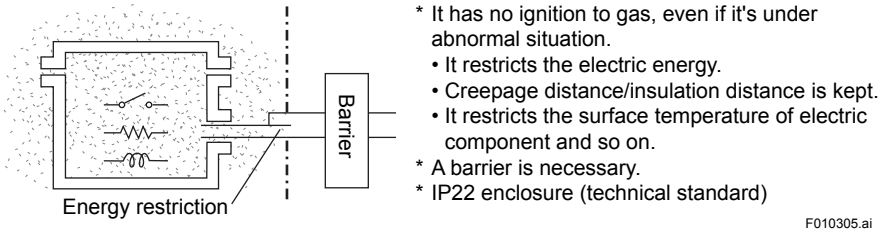

Figure Instrinsic Safety (Type “i”)

Encapsulation (Type “m”)

1) Definition: “Encapsulation” is the explosion protection construction that parts which may ignite potentially explosive atmospheres by heating are embedded in sealing compound, so that potentially explosive atmospheres cannot be ignited.

2) Construction

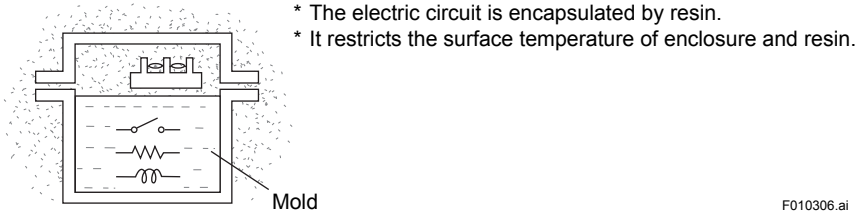

Figure Encapsulation (Type “m”)

Type of Protection “n” or Non-Incendive

1) Definition: “Type of protection “n” or Non-Incendive” is the special explosion protection construction for Zone 2 or Division 2. It is applicable to electric equipments which is not capable of igniting potentially explosive atmospheres under normal operation.

2) Construction

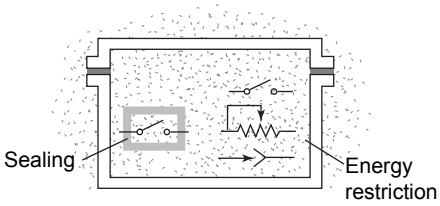

* Under normal operation, it restricts the electric sparks and so on.
  - It seals the component that creates sparks.
  - It restricts the energy that creates sparks.
  - Creepage distance/insulation distance is kept.
  - It restricts the surface temperature of electric component.
* The enclosure withstands the shock.
* The enclosure is sealed (BS standard).

F010307.ai

Figure Types of Protection “n” or Non-Incendive

Classification by Hazardous Area and Explosive Gas

Classification of Hazardous Area

In the plant which handle flammable gas or vapor, when they are emitted and mixed with air while at work, “potentially explosive atmospheres” are generated. The area that has a risk of explosion is called “Hazardous area”.

Zone 0: potentially explosive atmospheres exist continuously or for a long time (at all time)

Zone 1: potentially explosive atmospheres may exist under normal operation of the plant and so on (sometime)

Zone 2: no potentially explosive atmospheres exist under normal operation of the plant and so on, or exist briefly if they do (at accidents only)

Table Classification of Hazardous Area

Europe Australia	U.S. Canada	Example of usable explosion protection construction
Zone 0	Division 1	Intrinsic safety (ia)
Zone 1	Division 1	Intrinsic safety (ia) Flame-proof enclosures, Increased safety Pressurized apparatus, Oil immersion
	Division 2	Intrinsic safety (ib) Flame-proof enclosures, Increased safety Pressurized apparatus, Oil immersion
Zone 2	Division 2	Intrinsic safety (ia, ib, ic) Flame-proof enclosures, Increased safety Pressurized apparatus, Oil immersion Type of protection “n” Non-Incendive

Classification of Explosive Gas

Classification of Explosive gas (vapor) involves a division by explosion intensity and a division by explosion energy. Classifications in the technical standard, IEC, and ATEX are listed in the following table.

Table Classification of Explosive Gas

Classification	Flame-proof enclosures	Intrinsic safety	Major gas
	Maximum gap in mm where the fire runs, when the depth of joint surface is set to 25 mm	Minimum ignition current ratio of the target gas, when the minimum ignition current of methane, which is calculated by spark ignition test equipment, is assigned 1	
II A	0.9 or more	More than 0.8	Propane
II B	More than 0.5, 0.9 or less	0.45 or more, 0.8 or less	Ethylene
II C	0.5 or less	Less than 0.45	Hydrogen, Acetylene

The United States and Canada have another classification.

1.4 Symbols That Indicate Specifications of Explosion Protection

Each country has its own symbols. The following is an example of symbols.

Europe (ATEX, IECEx)

EXA 15 ATEX 0017 X
(1) (2) (3) (4)

F010403.ai

(1) EXA:
Notified body

(2) Year of issuance

(3) ATEX 0017:
EC-type examination certificate with sequence number 0017

(4) X
Specific conditions of use

Ex II 3(1) G Ex nA [ia Ga] IIC T4 Gc
(1) (2) (3) (4) (5) (6) (7) (8) (9)

F010404.ai

(1) Ex
Indicates that it is an explosion protection equipment

(2) Equipment group:
I: Underground mines and associated surface installations
II: All other surface installations

(3) Equipment category:
1: All other surface installations,
Level of protection: Very high, Presence of duration of explosive atmosphere: Continuous presence for Zone 0 and 20
2: All other surface installations,
Level of protection: High, Presence of duration of explosive atmosphere: Likely to occur for Zone 1 and 21
3: All other surface installations,
Level of protection: Enhanced, Presence of duration of explosive atmosphere: Unlikely to occur for Zone 2 and 22
( ): Associated apparatus

(4) G flammable gas / vapour or D combustible dust substances:
G: Firedamp
D: Coal dust

(5) Ex:
Indicates that it is an explosion protection equipment.

(6) Type of protection:
d: Flameproof enclosures “d”
px/py/pz: Pressurized enclosures “p”
q: Powder filling “q”
o: Oil immersion “o”
e: Increased safety “e”
ia/ib/ic: Intrinsic safety “i”
pv: Equipment protection by pressurized room “p”
nA/nC/nR: Type of protection “n”
ma/mb/mc: Encapsulation “m”
[ ]: Associated apparatus

(7) Equipment category:
II A: Propane
II B: Ethylene
II C: Acetylene/ Hydrogen

(8) Temperature class:
(Maximum surface temperature [°C])
T1: 450
T2: 300
T3: 200
T4: 135
T5: 100
T6: 85

(9) Equipment Protection Levels (EPL)
Ga: All other surface installations,
Level of protection: Very high, Presence of duration of explosive atmosphere: Continuous presence, for Zone 0
Da: All other surface installations,
Level of protection: Very high, Presence of duration of explosive atmosphere: Continuous presence, for Zone 20
Gb: All other surface installations,
Level of protection: High, Presence of duration of explosive atmosphere: Likely to occur for Zone 1
Db: All other surface installations,
Level of protection: High, Presence of duration of explosive atmosphere: Likely to occur for Zone 21
Gc: All other surface installations,
Level of protection: Enhanced, Presence of duration of explosive atmosphere: Unlikely to occur for Zone 2
Dc: All other surface installations,
Level of protection: Enhanced, Presence of duration of explosive atmosphere: Unlikely to occur for Zone 22

Note: The symbols differ slightly between countries.

The United States, Canada

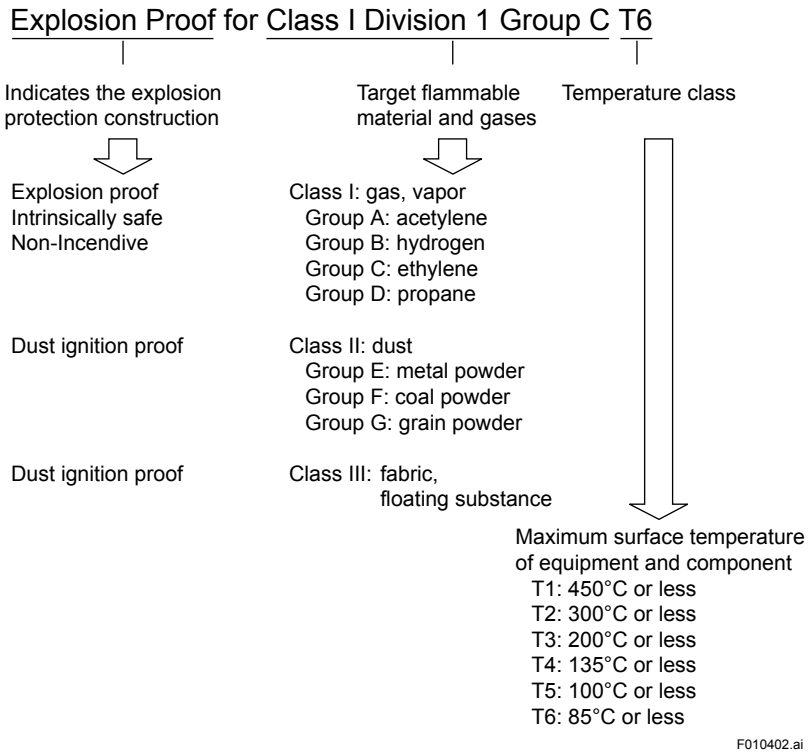

2. CENTUM and Explosion Protection Instrumentation

2.1 Explosion Protection Standards that CENTUM has Acquired

There are various standards for explosion protection in each region. Therefore, when equipment tries to be used in a certain region, the equipment needs to be an approved product with explosion protection standards adopted in the region. CENTUM, a global product, has complied the standards adopted in North America and Europe.

The table below lists the explosion protection standards that CENTUM complies and their approval authorities. This chapter mainly describes the explosion protection compliance of FIO/N-IO equipment.

Table Explosion Protection Standards that CENTUM Complies (1/2)

Explosion protection construction	Conformed standard number	Testing authorities	Appropriate equipment
CSA Non-Incendive	CAN/CSA-C22.2 No. 0-10 (R2015) C22.2 No. 213-M1987 (R2013) CAN/CSA-C22.2 No.61010-1-12 CAN/CSA-IEC 61010-2-201:14 CAN/CSA-C22.2 No.61010-2-030-12	FM	N-IO and associated equipment (For detail, refer to Appendix 1.1.)
	C22.2 No. 213-17 CAN/CSA-C22.2 No. 61010-1-12 CAN/CSA-C22.2 No. 61010-2-030-12 CAN/CSA-IEC 61010-2-201:14	FM	N-IO field enclosure (For detail, refer to Appendix 1.1.)
	C22.2 No. 213-M1987 CAN/CSA-C22.2 No.61010-1-12 CAN/CSA-IEC 61010-2-201:14 CAN/CSA-C22.2 No.61010-2-030-12 (for 100-120 V AC and 24 V DC power supply)	CSA	FIO (Field network I/O) and associated equipment (For detail, refer to Appendix 1.1.)
	CSA-C22.2 No. 213-M1987 (R2013) CAN/CSA-C22.2 No. 60079-0:2015 CAN/CSA-C22.2 No. 60079-15:2012 CAN/CSA-C22.2 No. 61010-1:2012	FM	A2BN4D Base plate for barrier (N-IO)
	CAN/CSA-C22.2 No. 61010-1-12 CAN/CSA-C22.2 No. 60079-0:11 CAN/CSA-C22.2 No. 213-M1987 (R2013) CAN/CSA-C22.2 No. 60079-15:12	FM	A2BN5D Base plate for barrier (N-IO)
CSA intrinsic safe explosion protection	CAN/CSA-C22.2 No. 60079-0:11 CAN/CSA-C22.2 No. 60079-11:14	FM	A2BN5D Base plate for barrier (N-IO)
FM Nonincendive	Class 3600:2011 Class 3611:2004 Class 3810:2005 (for 100-120 V AC, 220-240 V AC, and 24 V DC power supply)	FM	FCU (Field Control Unit), FIO, N-IO, and associated equipment (For detail, refer to Appendix 1.2.)
	FM 3600:2018 FM 3611:2018 FM 3810:2018 ANSI/UL 121201 Ed. 9 (2019) ANSI/UL 61010-1 Ed. 3 (2012) ANSI/UL 61010-2-030 Ed. 1 (2012) ANSI/UL 61010-2-201 Ed. 1 (2014)	FM	N-IO field enclosure (For detail, refer to Appendix 1.2.)

Note: Regarding the latest conformity standard, refer to the GS 33J01A10-01EN “Integrated Production Control System CENTUM VP System Overview”.

Table Explosion Protection Standards that CENTUM Complies (2/2)

Explosion protection construction	Conformed standard number	Testing authorities	Appropriate equipment
FM Nonincendive	Class 3600:2011 Class 3611:2004 Class 3810:2005 ANSI/ISA-60079-0 (12.00.01)-2013 ANSI/ISA-60079-15 (12.12.02)-2012	FM	A2BN4D Base plate for barrier (N-IO)
	Class 3600:2011 Class 3611:2004 Class 3810:2005 ANSI/ISA-60079-0 (12.00.01)-2013 ANSI/ISA-60079-15 (12.12.02)-2012	FM	A2BN5D Base plate for barrier (N-IO)
FM intrinsic safe explosion protection	Class 3600:2011 Class 3610:2010 ANSI/ISA-60079-0 (12.00.01)-2013 ANSI/ISA-60079-11 (12.02.01)-2014	FM	A2BN5D Base plate for barrier (N-IO)
ATEX Type “n”	EN 60079-0: 2012+A11:2013 EN 60079-15: 2010 (for 24 V DC power supply)	Self-declaration	FCU, FIO, N-IO and associated equipment (For detail, refer to Appendix 5.1.)
	EN 60079-0:2012+A11:2013 EN 60079-15:2010	EXA	A2BN5D Base plate for barrier (N-IO)
	EN IEC 60079-0:2018 EN IEC 60079-15:2019	FM	N-IO field enclosure For detail, refer to Appendix 5.1.)
ATEX Type “e” (increased safety “e”)	EN IEC 60079-0:2018 EN IEC 60079-7:2015 + A1:2018	FM	N-IO field enclosure (For detail, refer to Appendix 5.1.)
ATEX Type “i” (intrinsic safety explosion protection)	EN 60079-0:2012+A11:2013 EN 60079-11:2012	EXA	A2BN5D Base plate for barrier (N-IO)
IECEx Type “n”	IEC 60079-0:2011 IEC 60079-15:2010 (for 24 V DC power supply)	EXA	A2BN5D Base plate for barrier (N-IO)
		Baseefa	A2BN4D Base plate for barrier (N-IO)
		FM	FCU, N-IO and associated equipment without A2BN4D and A2BN5D (For detail, refer to Appendix 5.2.)
	IEC 60079-0 Ed. 7.0 (2017) IEC 60079-15 Ed. 5.0 (2017)	FM	N-IO field enclosure (For detail, refer to Appendix 5.2.)
IECEx Type “e” (increased safety “e”)	IEC 60079-0 Ed. 7.0 (2017) IEC 60079-7 Ed. 5.1 (2017)	FM	N-IO field enclosure (For detail, refer to Appendix 5.2.)
Emirates Conformity Assessment Scheme (ECAS-Ex) Type “n”	IEC 60079-0: 2011 IEC 60079-15: 2010	UL	FCU, N-IO and associated equipment except for A2BN4D and A2BN5D (For detail, refer to Appendix 5.3.)
IECEx Type “i” (intrinsic safety explosion protection)	IEC 60079-0:2011 IEC 60079-11:2011	EXA	A2BN5D Base plate for barrier (N-IO)

Note: Regarding the latest conformity standard, refer to the GS 33J01A10-01EN “Integrated Production Control System CENTUM VP System Overview”.

2.2 Explosion Protection Construction that I/O Devices of CENTUM Comply

As described in 2.1, countries define their own standards and rules regarding technical methods for explosion protection. With CENTUM, NI, Type “n” and intrinsic safety explosion protection are adopted as explosion protection construction for the installation of FCS or node unit in hazardous areas. The adoption of NI and Type “n” with FIO and N-IO devices of CENTUM allows FCS or node unit to be installed in Class II hazardous area (Division 2, Zone 2) which covers most hazardous areas. This provides more variety of instrumentation.

With N-IO field enclosure, NI, “ec” and Type “n” are adopted as explosion protection construction for the installation of N-IO field enclosure in hazardous areas.
The adoption of NI allows N-IO field enclosure to be installed in Class II hazardous area (Division 2 or Zone 2).

N-IO devices are equipment compliant with intrinsic safety explosion protection and are the modules that can be connected to the devices installed in Zone 0, Zone 1 and Zone 2 (Division 1, Division 2).

To install FCS or node unit in a hazardous area, the node itself and the terminal board as well as the I/O modules should acquire standards. The figure bellow shows one example of Type “n” standard compliant devices. The devices shown in half-tone dot meshing and the cables shown in heavy line are Type “n” compliant products. The same is with NI compliant devices. FCS or node unit can be installed in Zone 2 (Division 2). See “5.2 List of Type “n”, “ec” Compliant Products for the list of intrinsic safety explosion protection compliant devices.

See the tables in Appendix for details of each CENTUM equipment and their approved standards.

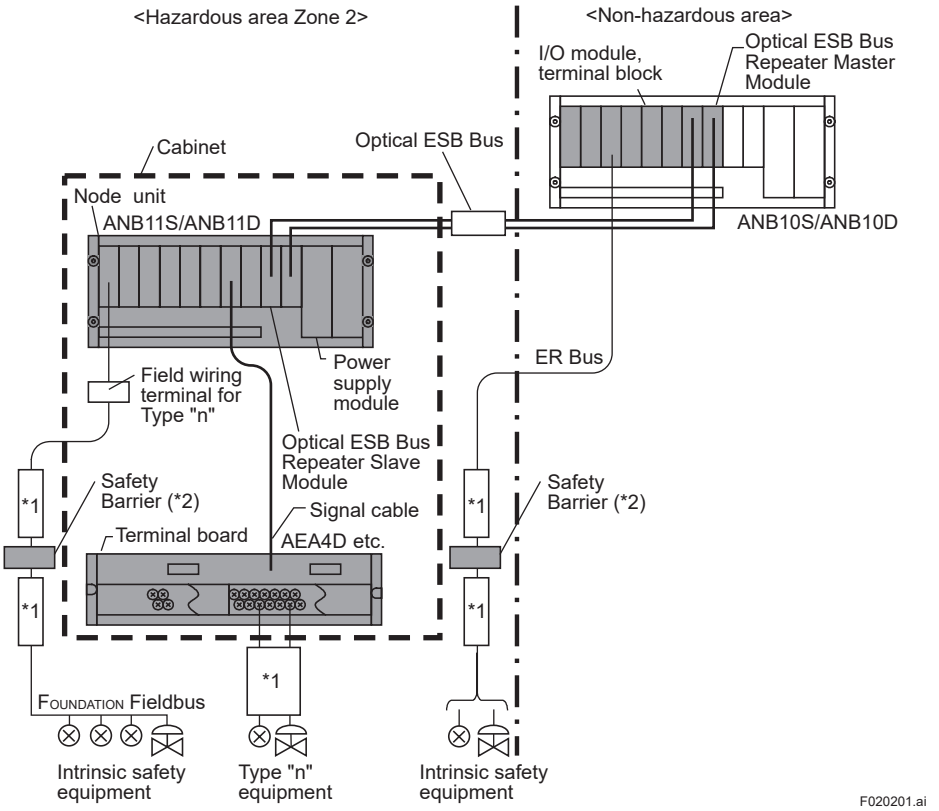

*1: Explosion-proof wiring that is defined in EN 60079-14 and the rules/standards of each country or region.
*2: Explosion-proof structure for hazardous area is required.

Figure Example of Type “n” Standard Compliant Devices

2.3 Overview of Connecting CENTUM to the Devices Installed in a Hazardous Area

This section describes the overview of connecting CENTUM to the devices installed in a hazardous area by giving some examples.

Overview of Connecting a Type “n”-compliant FIO Module with Devices

A Type “n”-compliant module can be connected to the intrinsic safety equipment installed in Zone 0, Zone 1 and Zone 2 using a barrier and explosion-proof wiring as shown in the following figures.

They can be connected to Intrinsic safety equipment installed in Zone 0, 1 and 2 using Explosion-proof wiring that is defined in EN60079-14 and the rules/standards of each country or region.

They can be connected to Type “n” equipment installed in Zone 2 using explosion-proof wiring that is defined in EN 60079-14 and the rules/standards of each country or region.

And they can be connected to flameproof equipment using explosion-proof wiring that is defined in EN 60079-14 and the rules/standards of each country or region.

A Type “n”-compliant module and FCS or node unit (24 V DC feeding type) can be installed in Zone 2 by mounting in a keyed metal cabinet with protection rating of IP54 or higher.

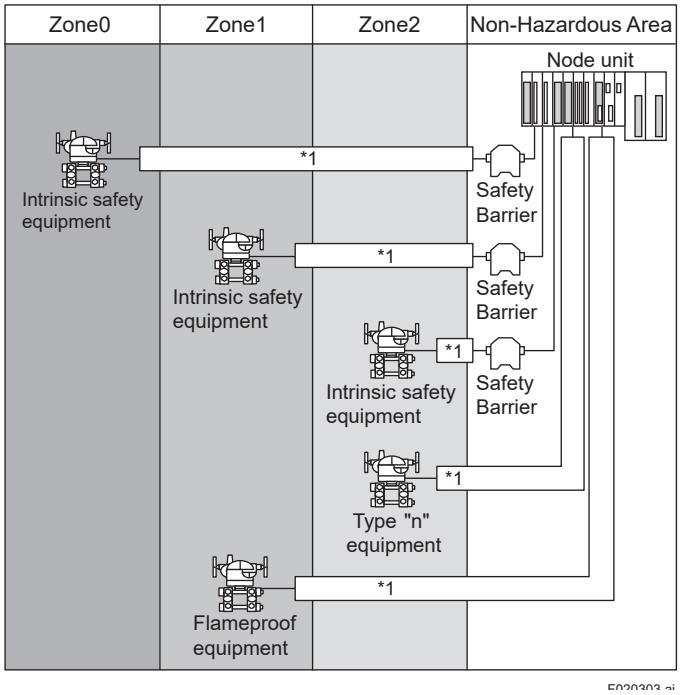

*1: Explosion-proof wiring that is defined in EN 60079-14 and the rules/standards of each country or region.

Figure Connection of a Type “n” Compliant Module (1)

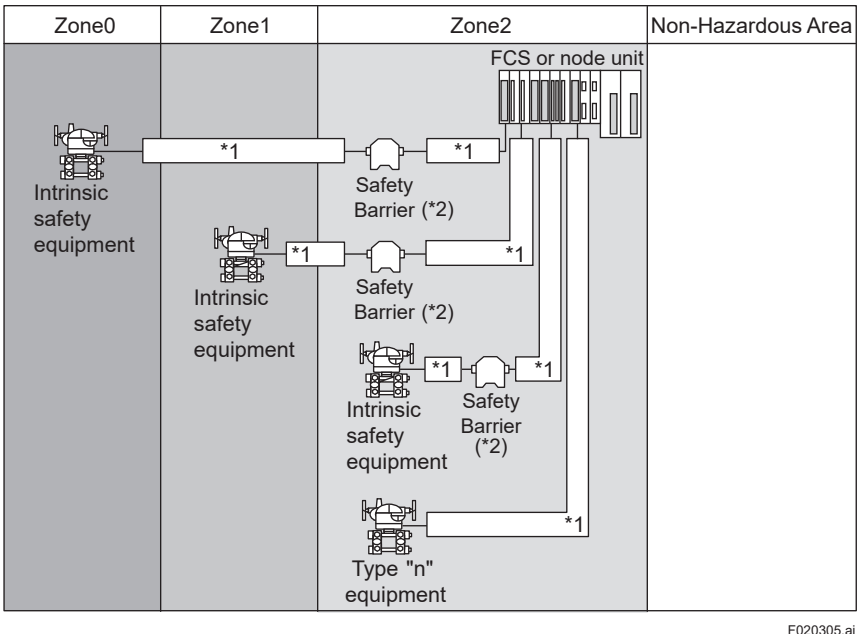

*1: Explosion-proof wiring that is defined in EN 60079-14 and the rules/standards of each country or region.
*2: Explosion-proof structure for hazardous area is required.

Figure Connection of a Type “n” Compliant Module (2)

Overview of Connecting Non-Incendive Compliant FIO Module

NI-compliant module can be connected to the devices installed in Division 2. For the connection to an NI-compliant module, it is necessary to compare parameters between the device installed in a hazardous area and the device of CENTUM to evaluate whether connection is possible or not.

An NI-support module and FCS or node unit can be installed in Division 2 by mounting in a keyed metal cabinet approved by approval authorities.

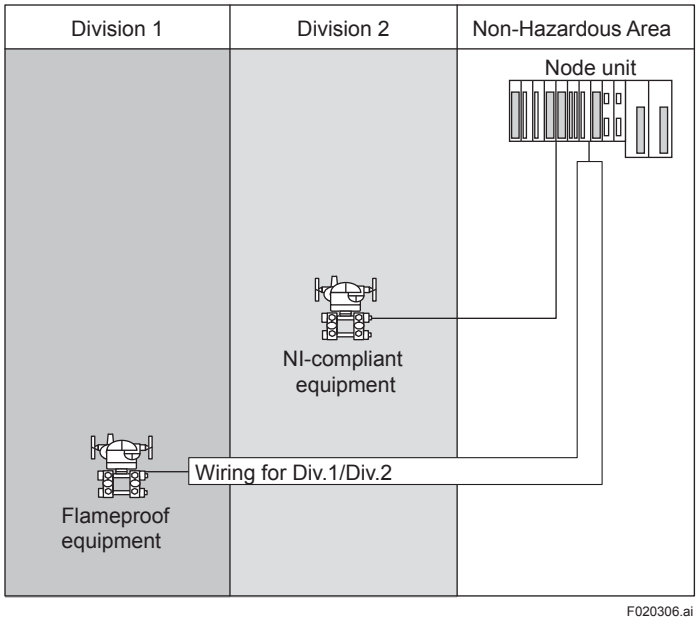

Figure Connection of an NI Compliant Module (1)

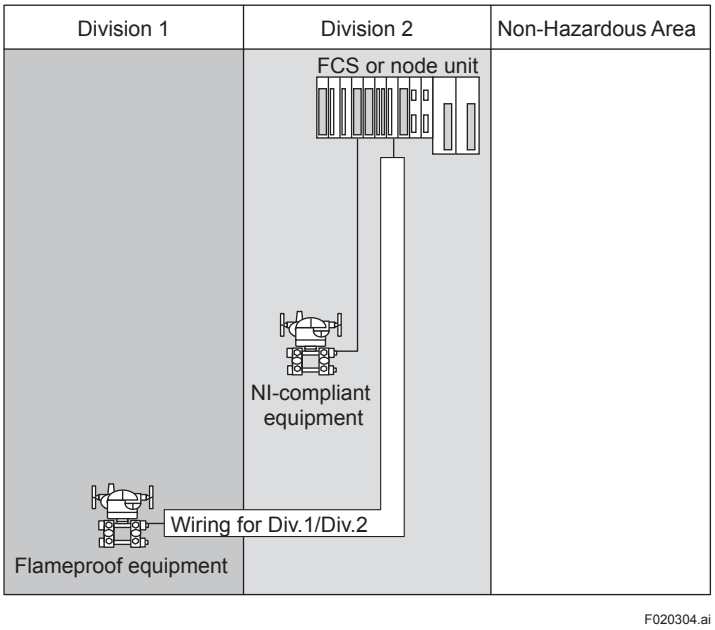

Figure Connection of an NI Compliant Module (2)

Overview of Connecting N-IO Components

Overview of Connecting A2BN3D adaptor base plate for ATEX and IECEx

A2BN3D Base plate for adaptor can be connected to the intrinsic safety equipment installed in Zone 0, Zone 1, and Zone 2 using a barrier and explosion-proof wiring as shown in the following figures.
They can be connected to Intrinsic safety equipment installed in Zone 0, 1, and 2 using Explosion-proof wiring that is defined in EN/IEC 60079-14 and the rules/standards of each country or region.
They can be connected to Type “n” equipment installed in Zone 2 using explosion-proof wiring that is defined in EN/IEC 60079-14 and the rules/standards of each country or region.
And they can be connected to flame-proof equipment using explosion-proof wiring that is defined in EN/IEC 60079-14 and the rules/standards of each country or region.
N-IO field enclosure A2NN70D is equipped with A2BN3D inside the enclosure, thus the following figure is also applicable to A2NN70D. In the case of A2NN70D, replace A2BN3D with A2NN70D.
N-IO node unit including A2BN3D and FCS or node unit (24 V DC feeding type) can be installed in Zone 2 by mounting in a keyed metal cabinet with protection rating of IP54 or higher.

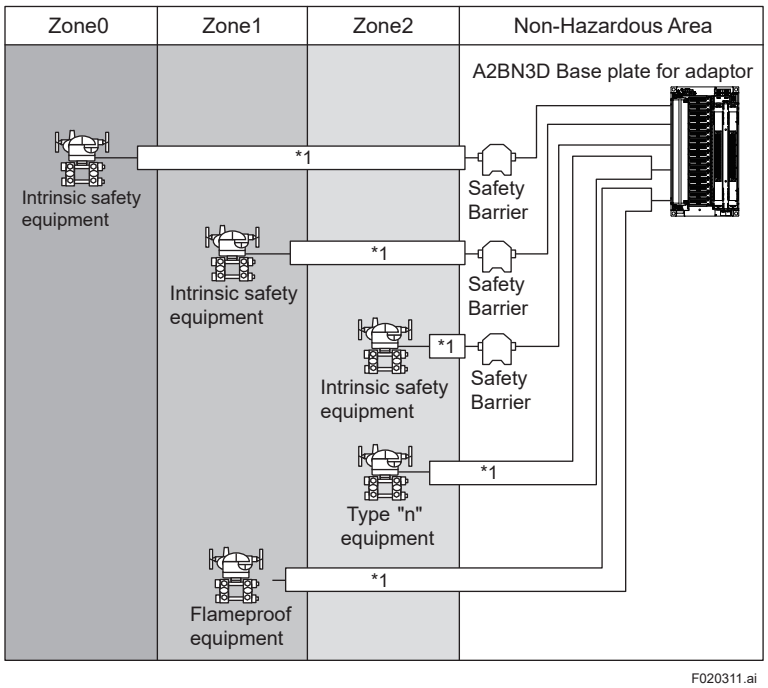

*1: Explosion-proof wiring that is defined in EN/IEC 60079-14 and the rules/standards of each country or region.

Figure Connection of A2BN3D for ATEX and IECEx (1)

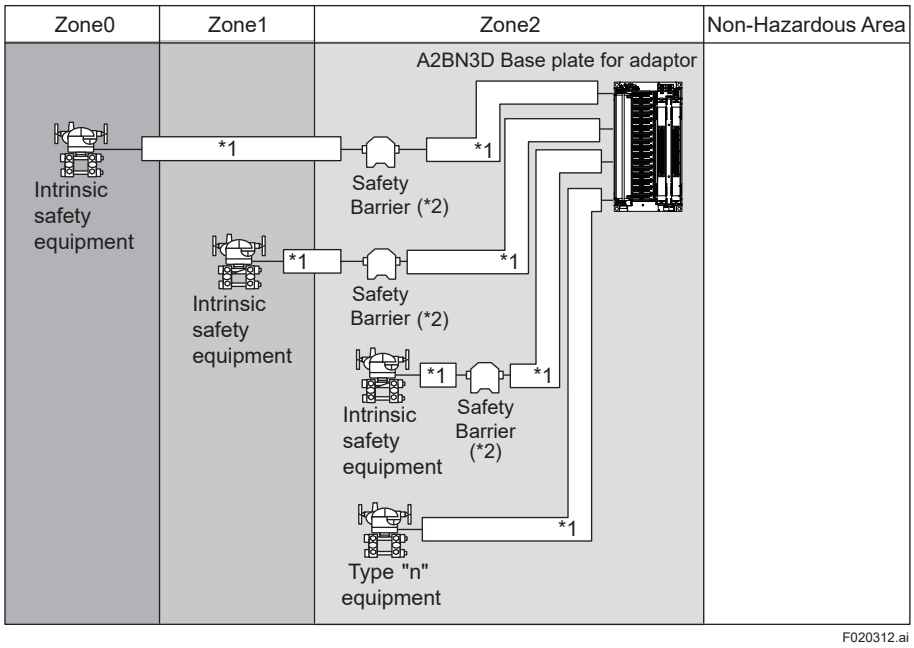

1: Explosion-proof wiring that is defined in EN/IEC 60079-14 and the rules/standards of each country or region.
*2: Explosion-proof wiring for flameproof equipment that is defined in EN/IEC 60079-14 and the rules/standards of each country or region.

Figure Connection of A2BN3D for ATEX and IECEx (2)

Overview of Connecting A2BN3D adaptor base plate for FM and CSA

A2BN3D base plate for adaptor can be connected to the devices installed in Division 2. For the connection to an NI-compliant module, it is necessary to compare parameters between the device installed in a hazardous area and the device of CENTUM to evaluate whether connection is possible or not.

N-IO field enclosure A2NN70D is equipped with A2BN3D inside the enclosure, so the figure below is also applicable for A2NN70D. In that case, replace A2BN3D with A2NN70D in the the figure below.

N-IO node unit including A2BN3D can be installed in Division 2 by mounting in a keyed metal cabinet approved by approval authorities.

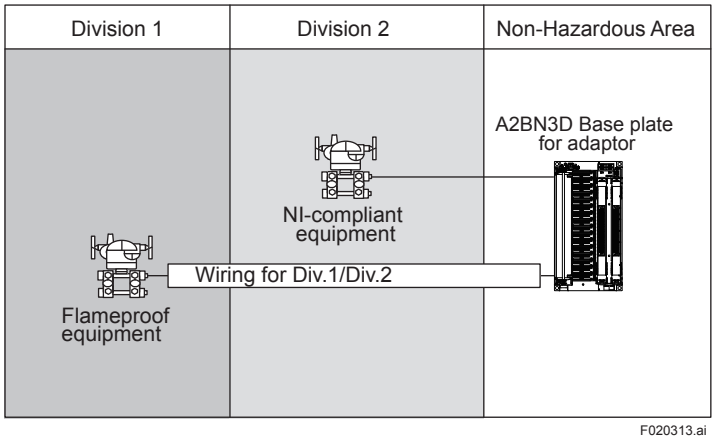

Figure Connection of A2BN3D for FM and CSA (1)

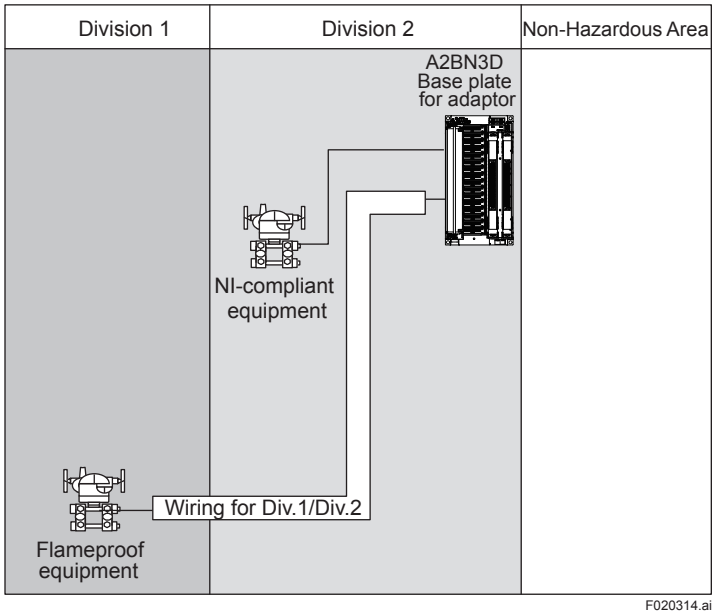

Figure Connection of A2BN3D for FM and CSA (2)

Overview of Connecting A2BN4D barrier base plate for ATEX and IECEx

Intrinsic safety (hereinafter I.S.) barriers (*1) of MTL products from Eaton Electric Limited which can be mounted to the base plate (A2BN4D), comply with I. S. explosion protection standard (*2). I. S. barriers can be connected to the I. S. equipment installed in the hazardous area with explosion-proof wiring as shown in the following figures.

*1: Refer to “Base Plates (for N-IO)” (GS 33J62F40-01EN).
*2: Refer to the instruction manual of MTL products for installation of the I.S. barriers.

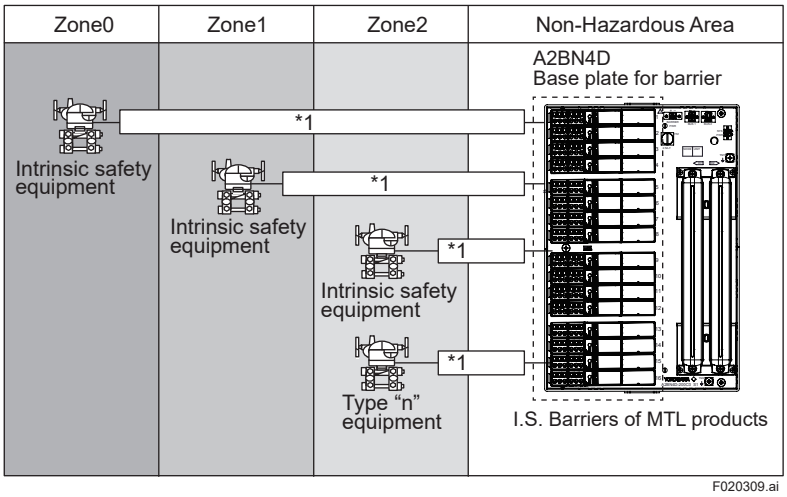

1: Explosion-proof wiring that is defined in EN/IEC 60079-14 and the rules/standards of each country or region.

Figure Connection of A2BN4D for ATEX and IECEx (1)

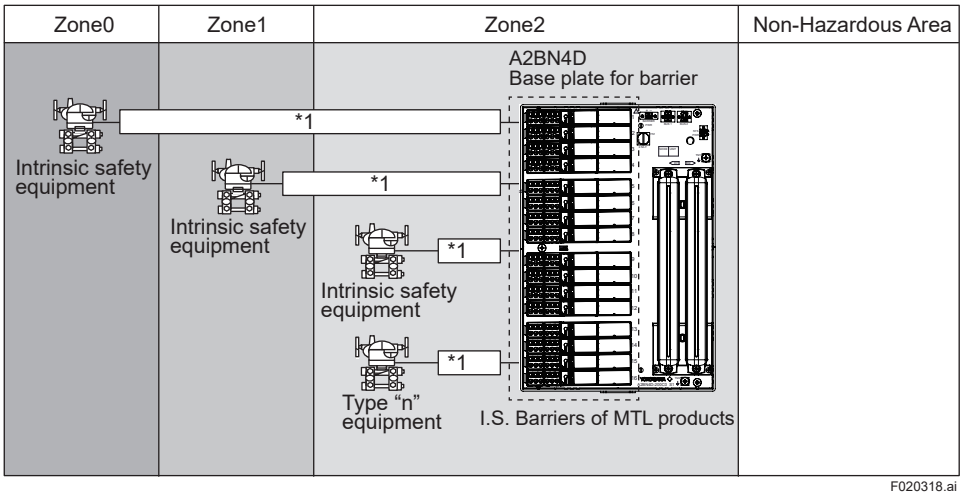

1: Explosion-proof wiring that is defined in EN/IEC 60079-14 and the rules/standards of each country or region.

Figure Connection of A2BN4D for ATEX and IECEx (2)

Overview of Connecting A2BN4D barrier base plate for FM and CSA

I.S. barriers of MTL products which can be mounted to the base plate (A2BN4D), comply with I.S. explosion protection standard. For connecting to the devices installed in Division 1 or Division 2, it is necessary to compare intrinsic safety parameters between the devices installed and A2BN4D to evaluate whether connection is possible or not.

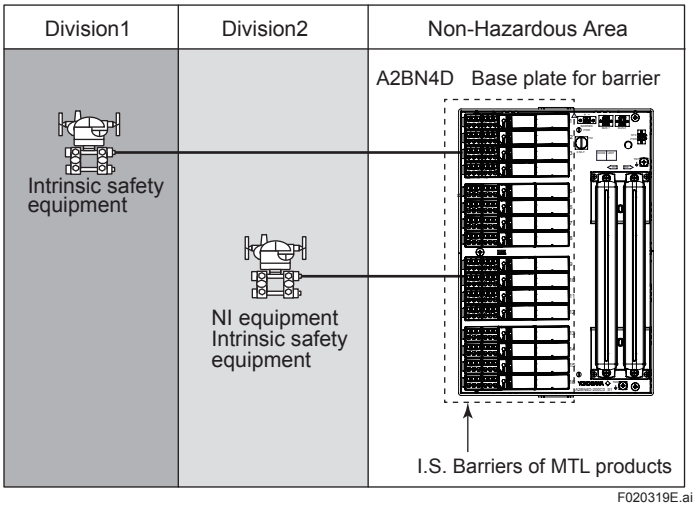

Figure Connection of A2BN4D for FM and CSA (1)

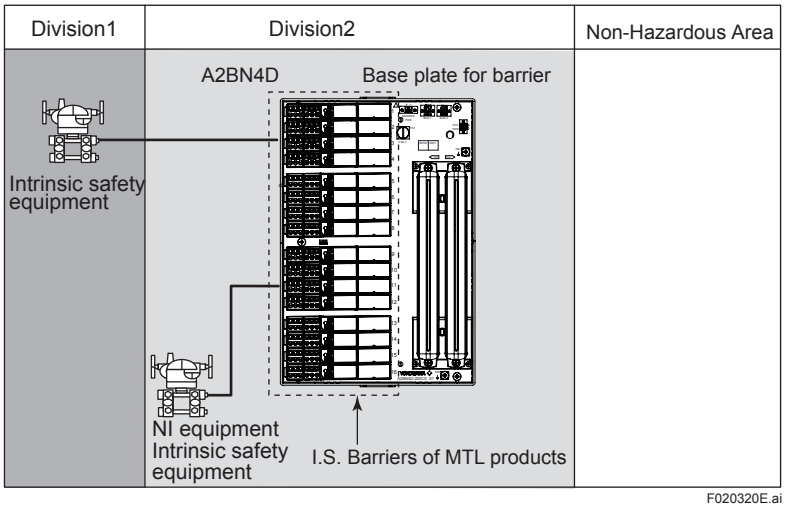

Figure Connection of A2BN4D for FM and CSA (2)

Overview of Connecting A2BN5D barrier base plate for ATEX and IECEx

A2BN5D base plate for barrier can be connected to the I.S./Type “n” equipment installed in the hazardous area with explosion-proof wiring and can be installed in Zone 2 by mounting in a keyed metal cabinet with protection rating of IP54 or higher as shown in the following figures. Please refer to the instruction manual of P+F I.S. barriers for installation of I.S. barriers.

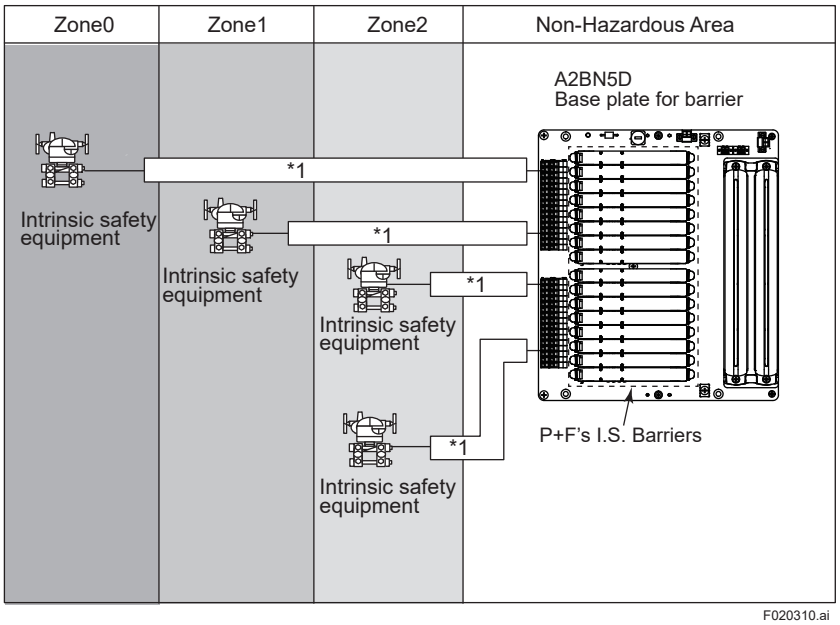

*1: Explosion-proof wiring that is defined in EN/IEC 60079-14 and the rules/standards of each country or region.

Figure Connection of A2BN5D for ATEX and IECEx (1)

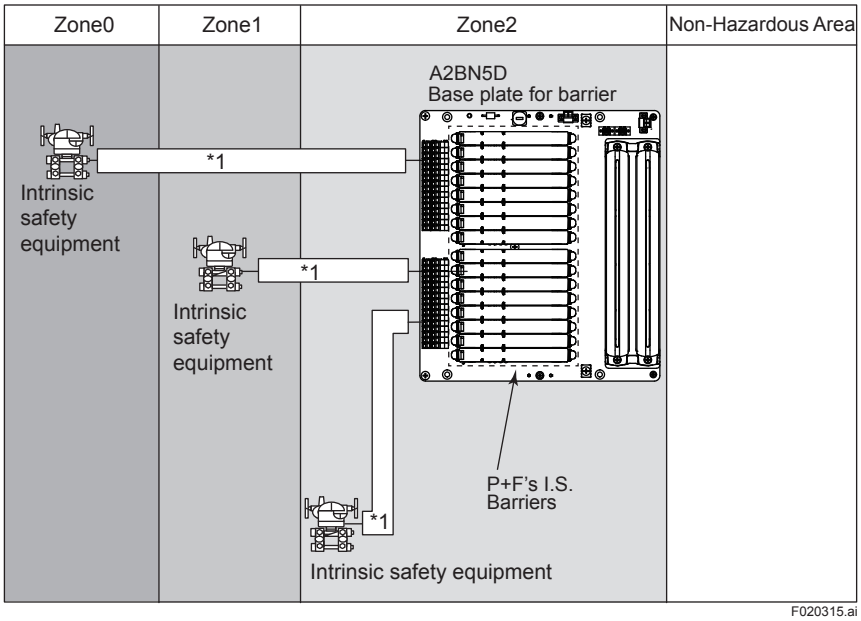

*1: Explosion-proof wiring that is defined in EN/IEC 60079-14 and the rules/standards of each country or region.

Figure Connection of A2BN5D for ATEX and IECEx (2)

Overview of Connecting A2BN5D barrier base plate for FM and CSA

A2BN5D base plate for barrier can be connected to the devices installed in Division 1 and Division 2. For connecting to the devices installed in Division 1 or Division 2, it is necessary to compare intrinsic safety parameters between the devices installed and A2BN5D to evaluate whether connection is possible or not.

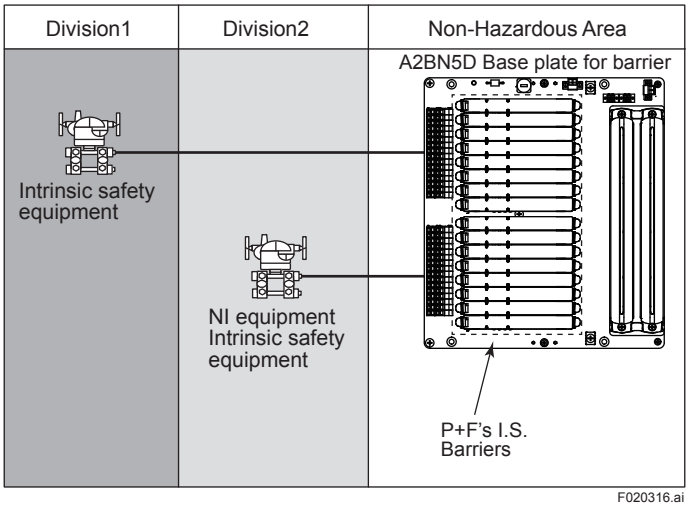

Figure Connection of A2BN5D for FM and CSA (1)

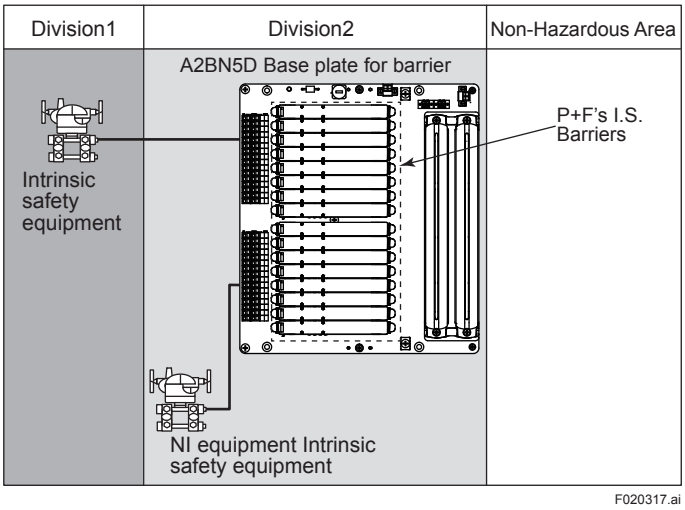

Figure Connection of A2BN5D for FM and CSA (2)

3. Explosion Protection Instrumentation in Zone 2/Division 2

3.1 Non-Incendive

Non-Incendive (hereafter described as NI), especially in North America, represents one of the explosion protection constructions for explosion-proof apparatus used in hazardous areas.

NI is a construction that enhances safety not to cause a spark, an arc or high surface temperatures in a normal operation.

3.1.1 CSA NI (CSA Non-Incendive)

A node unit for FIO, an I/O module (FIO), and an optic repeater of CENTUM have acquired CSA NI certificates of the following standards from CSA. A node unit for N-IO and N-IO field enclosure have acquired CSA NI certificates of the following standards from FM.

This approval proves that the products above can be used in hazardous areas such as Class I and Division 2 (*1) and that the I/O module for FIO/N-IO and base plate can be directly connected to an CSA NI approved field device installed in hazardous areas such as Class I and Division 2.

In addition, I/O modules (FIO) and base plate installed in non-hazardous areas can be directly connected to an CSA NI approved field device installed in hazardous areas such as Class I and Division 2.

*1: Class I, Division 2
This places where gases or vapors do not form a potentially explosive atmosphere in a normal state, or even if so, the atmosphere exists for only a short time.

■ Approved Types and Standards

Class I, Division 2, Groups A, B, C, and D, Temperature code T4 (*1)
CAN/CSA-C22.2 No. 0-10 (2015) (*1)
C22.2 No. 213-M1987 (2013) (*1)
CAN/CSA-C22.2 No.61010-1-12 (*1)
CAN/CSA-C22.2 No.61010-2-030-12 (*1)
CAN/CSA-IEC 61010-2-201:14 (*1)

*1: Applied for the below products.
A2EN501, A2NN30D, A2PW503, A2PW504, A2MMM843, A2MDV843, A2SMX801, A2SMX802, A2SAM105, A2SAM505, A2SAP105, A2SAT105, A2SDV105, A2SDV505, A2SDV506, A2BN3D, A2BM4, ANB10S, ANB11S, ANB10D, ANB11D, ANT10U, PW481, PW484, SB401, ANT401, ANT411, ANT421, ANT502, ANT512, ANT522, ALF111, ATF9S, AEF9D, AEPV7D, PW441, and PW444.

Class I, Division 2, Groups A, B, C, and D, T4; (*2)
Non Sparking for Class I, Zone 2, Ex nA IIC T4 Gc hazardous (classified) locations with an ambient temperature rating of -20 °C to +60 °C. (*2)
CSA-C22.2 No. 213-M1987 (R2013) (*2)
CAN/CSA-C22.2 No. 60079-0:2015 (*2)
CAN/CSA-C22.2 No. 60079-15:2012 (*2)
CAN/CSA-C22.2 No. 61010-1:2012 (*2)

*2: Applied for A2BN4D.

Class I, Division 2, Groups A, B, C, and D, Temperature Class T4; (*3)
Non-Sparking Class I Zone 2, Group IIC, Temperature Class T4; hazardous locations. (*3)
CAN/CSA-C22.2 No. 61010-1-12 (*3)
CAN/CSA-C22.2 No. 213-M1987 (R2013) (*3)
CAN/CSA-C22.2 No. 60079-15:12 (*3)

*3: Applied for A2BN5D.

Class I, Division 2,Groups A, B, C, and D, Temperature code T4 (*4)
C22.2 No. 213-M1987 (*4)
CAN/CSA-C22.2 No.61010-1-12 (*4)
CAN/CSA-C22.2 No.61010-2-030-12 (*4)
CAN/CSA-IEC 61010-2-201:14 (*4)
(for 100-120 V AC and 24 V DC power supply)

*4: Applied for products complied with CSA Non-incendive, except for A2EN501, A2NN30D, A2PW503, A2PW504, A2MMM843, A2MDV843, A2SMX801, A2SMX802, A2SAM105, A2SAM505, A2SAP105, A2SAT105, A2SDV105, A2SDV505, A2SDV506, A2BN3D, A2BM4, ANB10S, ANB11S, ANB10D, ANB11D, ANT10U, PW481, PW484, SB401, ANT401, ANT411, ANT421, ANT502, ANT512, ANT522, ALF111, ATF9S, AEF9D, AEPV7D, PW441, PW444, A2BN4D, A2BN5D, A2NN70D, A2NN60D, A2CB60, and A2CX100.

Class I, Division2, Groups A, B, C, and D, Temperature code T4 (*5)
C22.2 No.213-17 (*5)
CAN/CSA-C22.2 No.61010-1-12 (*5)
CAN/CSA-C22.2 No. 61010-2-030-12 (*5)
CAN/CSA-IEC 61010-2-201:14 (*5)

*5: Applied for A2NN70D, A2NN60, A2CB60, and A2CX100.

Special Condition for Use

The A2BN4D base plate for barrier shall be used with I/O module (A2MMM843, A2MDV843) and MTL MTL4500 module series.

The A2BN5D base plate for barrier shall be used with I/O module (A2MMM843, A2MDV843) and P+F HIC module series.

Precautions in Use

- To install a device in accordance with the standards above, the device needs to be accommodated in a keyed metal cabinet and installed. It is necessary to use a cabinet approved by CSA or local testing authorities for explosion-proof products. (*1)
- Use a cabinet which is larger than the size of W600 X H760 X D350 (mm) to mount a FIO node unit on. (*1)
- As a rule, NI explosion protection with a connection of a CSA standard approved device and an FM standard approved device shall not be approved. It is necessary to connect devices approved by the same standard.
- As for the precautions of N-IO field enclosure, refer to Appendix2. CSA NI Control Drawing.

*1: Excluding N-IO field enclosure.

CSA NI Approved Products and Their Configuration Example

The figure below is an example of the configuration of CSA NI approved products which can be installed in hazardous areas. See the table “The List of CSA NI Compliant Products” in Appendix for details.

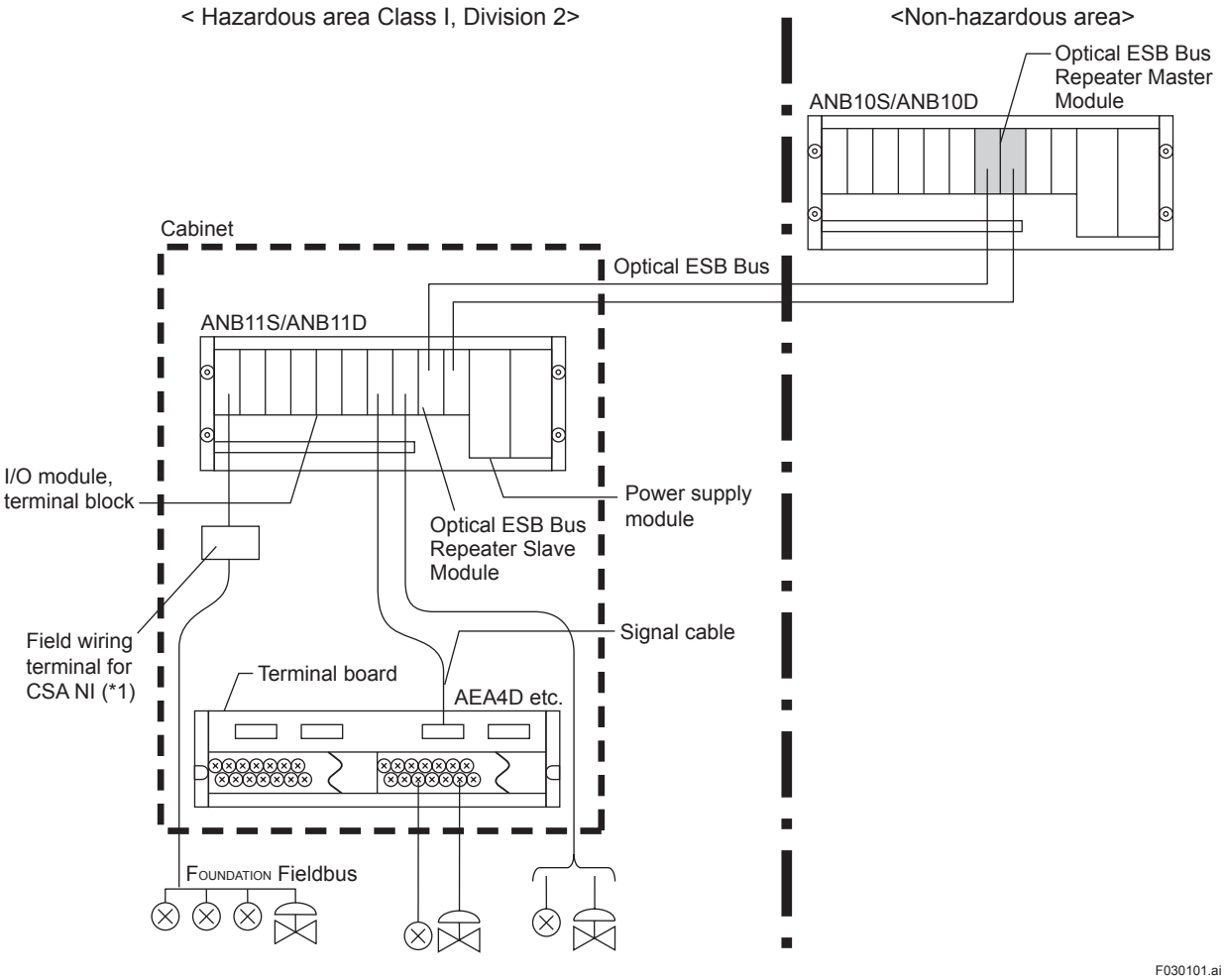

*1: Use a barrier for a FOUNDATION fieldbus as a field wiring terminal for CSA NI. (Ex. barrier KLD2-PR-Ex1.IEC1)

Figure Example of the configuration of CSA NI approved products

Power Supply Wiring

The power cable of a node unit for FIO and an optic repeater must be wired from the non-hazardous area by using Division 2 wiring dedicated in potentially explosive atmospheres such as a threaded metal conduit. In addition, it is necessary to be wired not to apply stress at the end of the cable.

When AED5D and A1BD5D are combined with ADV151, ADV161, ADV551 and ADV561, install an explosion-proof wiring defined in the relevant country for the wiring outside of the external power supply cable cabinet.

Wiring should be installed to conform to all wiring shall comply with Canadian Electrical Code Part I and Local Electrical Codes.

The power cable of N-IO field enclosure must be wired in accordance with the instructions provided in the related GS (General Specifications), TI (Installation Guidance) and IM (User’s Manuals).

Signal Wiring

Cables other than power cables should be wired to conform to all wiring shall comply with Canadian Electrical Code Part I and Local Electrical Codes.

The following is special considerations.

- The cable (AKB332) connected to ADV141 and a field wiring need a Division 2 wiring dedicated in potentially explosive atmospheres such as a conduit wiring.
- When AAP135 is used in a power supply mode, the cable (KS1) connected to AAP135 and a field wiring need a conduit wiring.
- When a combination of ADV551 and AED5D or A1BD5D or that of ADV561 and AED5D or A1BD5D is used in a voltage output mode, a field wiring connected to AED5D or A1BD5D need a Division 2 wiring dedicated in potentially explosive atmospheres such as a conduit wiring.
- For ALF111, use a barrier for a fieldbus as a field wiring terminal for NI. (Ex. Barrier KLD2-PR-Ex1.IEC1)
- Use DC power supply compliant with the Standard for Explosion Protection for combination of ADV151 and AED5D or A1BD5D, or that of ADV161 and AED5D or A1BD5D in contact input mode and voltage input mode. Connection according to the parameters of this power supply makes signal wiring outside of the cabinet compliant with the local standard. Please read the instruction on contact input mode wiring and the instruction on voltage input mode when you actually install wiring.
- The signal cable of N-IO field enclosure must be wired in accordance with the instructions provided in the related GS (General Specifications), TI (Installation Guidance) and IM (User's Manuals).

Instruction on Contact Input Mode Wiring

When the number of channels is limited because power supply exceeds its capacity, but parallel connection for the purpose of increasing capacity is not allowed.
Mount ADV151, ADV161, AED5D, A1BD5D, AKB331 and AKB337 in the same cabinet.
When ADV151 or ADV161 is mounted in a cabinet different from that for AED5D or A1BD5D, apply explosion-proof wiring defined in each country for AKB331 or AKB337.

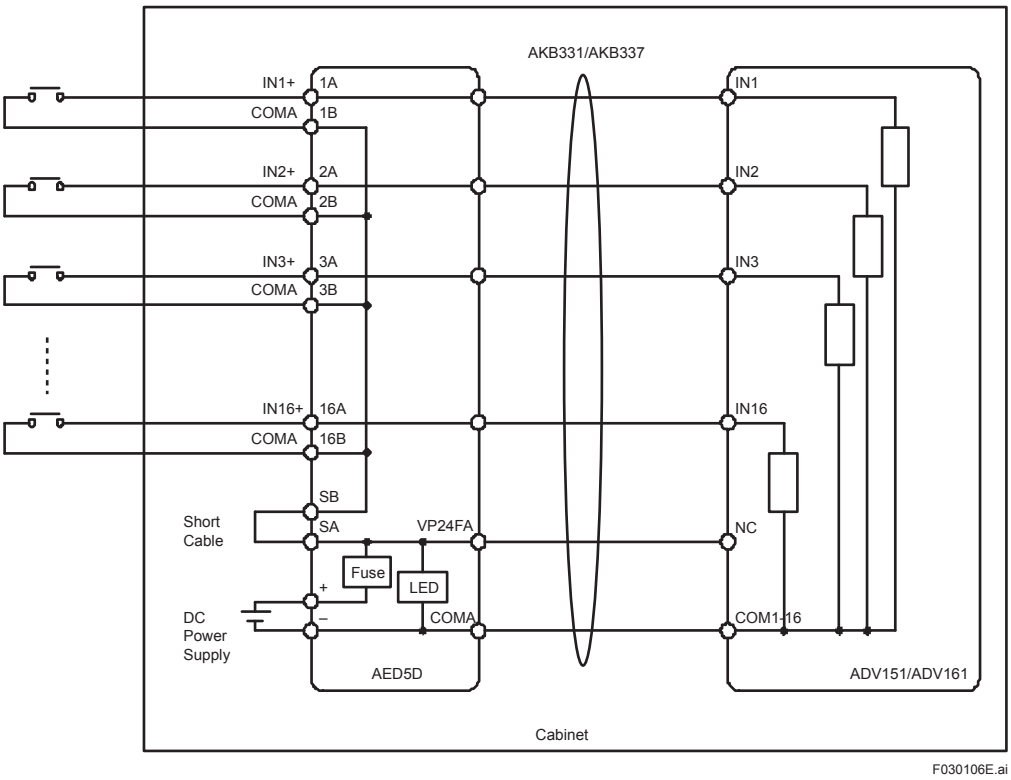

Figure Connection example of ADV151/ADV161 Contact Input Mode

Instruction on Voltage Input Mode Wiring

The total current value of the channels must be within the rated current (limit) for DC power supply.
But if the total current value exceeds the rated current, reduce the number of channels to be supplied at on time, and prepare the same DC power supply for each channel group.
In such a case, the polarity of power sources should be the same.
Mount ADV151, ADV161, AED5D, A1BD5D, AKB331 and AKB337 in the same cabinet.
When ADV151 or ADV161 is mounted in a cabinet different from that for AED5D or A1BD5D, apply explosion-proof wiring defined in each country for AKB331 or AKB337.

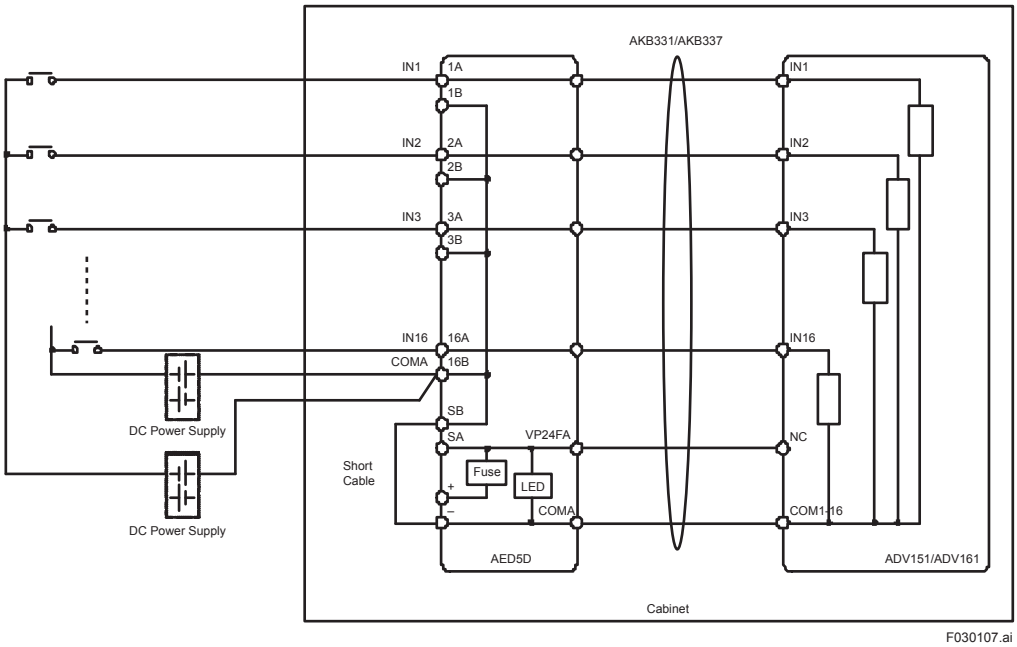

Figure Connection example of ADV151/ADV161 Voltage Input Mode

WARNING

(1) Attaching or removing a cable, a fuse or a card

With the system in operation, never attach or remove a cable, a fuse or a card in a potentially explosive atmosphere.

(2) Maintenance of a product

When maintenance of a product is carried out with the system in operation, never attach or remove the product in a potentially explosive atmosphere.

<English>

WARNING-EXPLOSIVE HAZARD-

DO NOT DISCONNECT WHILE CIRCUIT IS LIVE UNLESS AREA IS KNOWN TO BE NON-HAZARDOUS.

<French>

AVERTISSEMENT-RISQUE D'EXPLOSION. NEPAS DÉBRANCHER TANT QUE LE CIRCUIT EST SOUS TENSION, Á MOINS QU'IL NE S'AGISSE D'UN EMPLACEMENT NON DANGEREUX.

WARNING

For the warning of N-IO field enclosure, refer to Appendix 2. CSA NI Control Drawing.

Parameters in Connecting with CSA NI Devices

Energy transfer influences CSA NI properties. In order to maintain these properties, parameters must be displayed when CSA NI devices are connected.

To display parameters, CSA NI devices are divided into the device that gives energy and the device that receives energy. The parameters displayed in each device are as follows.

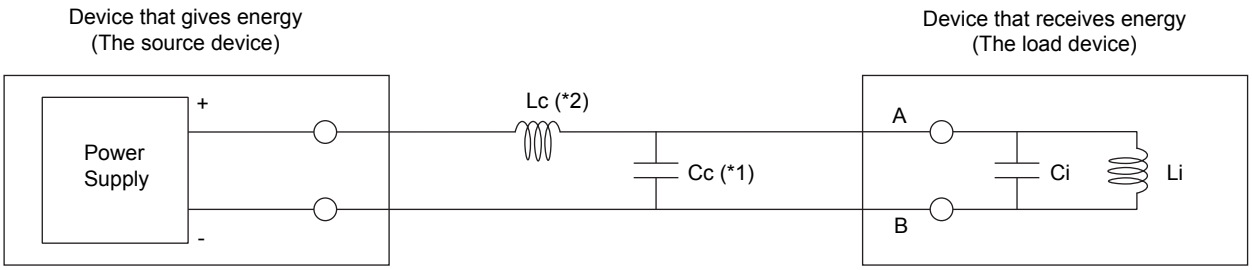

Displayed parameters
Voc: maximum open-circuit output voltage
Isc: maximum short-circuit output current
Ca: maximum allowable capacitance
La: maximum allowable inductance
Cn: maximum allowable capacitance (in a normal circuit voltage of Vn)
Vn: normal circuit voltage
Ln: maximum allowable inductance (in a normal circuit current of In)
In: normal circuit current

*1: Cc: capacitance of the external wiring
*2: Lc: inductance of the external wiring

Displayed parameters
Vmax: maximum input voltage
Imax: maximum input current
Ci: maximum internal capacitance
Li: maximum internal inductance

F030102E.ai

Figure Connection of CSA NI Devices and Associated Parameters

Parameters of the Device which Gives Energy

Voc: maximum open-circuit output voltage
Maximum voltage that occurs at the open terminal (part) when the Non-Incendive (NI) circuit is open

Isc: maximum short-circuit output current
Maximum current which currents when the NI circuit is short and earth fault

Ca: maximum allowable capacitance
Maximum capacitance that can be connected to the NI circuit

La: maximum allowable inductance
Maximum inductance that can be connected to the NI circuit

Cn: maximum allowable capacitance (in a normal circuit voltage of Vn)
Maximum capacitance that can be connected in a normal circuit voltage of Vn (the circuit current in a state where no opening circuit, short circuit, earth fault occur) in the NI circuit

Vn: normal circuit voltage
Circuit voltage in a state where no opening circuit, short circuit, earth fault occur

Ln: maximum allowable inductance (in a normal circuit current of In)
Maximum inductance which can be connected in a normal circuit voltage of In (the circuit current in a state where no opening circuit, short circuit, earth fault occur) in the NI circuit

In: normal circuit current
Circuit current in a state where no opening circuit, short circuit, earth fault occur

Cc: capacitance of the external wiring

Lc: inductance of the external wiring

Parameters of the Device which Receives Energy

Vmax: maximum input voltage
Maximum voltage that can maintenance the NI properties of the device

Imax: maximum input current
Maximum current that can maintenance the properties of the device

Ci: maximum internal capacitance
Maximum internal capacitance of the device that can be considered to conduct to the NI circuit (the external wiring) when the device is connected to the NI circuit (the external wiring)

Li: maximum internal inductance
Maximum internal inductance of the device that can be considered to conduct to the NI circuit (the external wiring) when the device is connected to the NI circuit (the external wiring)

How to Compare Parameters

It is necessary to compare both parameters of the CENTUM I/O module and the CSA NI device when they are connected.

Comparing parameters between the device which gives energy and the device which receives energy are connected are the following two ways.

In either way to compare, wiring construction should be installed to conform to NEC (National Electrical Code) or the wiring construction standards in the local regions where wiring will be installed.

Installing a Field Wiring in Accordance in a Division 2 Dedicated Wiring Construction

Device that gives energy		Device that receives energy
Vn	≤	Vmax
In	≤	Imax
Cn	≥	summation of Ci in the device which receives energy + summation of capacitance Cc in the external wiring
Ln	≥	summation of Li in the device which receives energy + summation of inductance Lc in the external wiring

Installing a Field Wiring in Accordance in a General Wiring Construction

Device that gives energy		Device that receives energy
Voc	≤	Vmax
Isc	≤	Imax
Ca	≥	summation of Ci in the device which receives energy + summation of capacitance Cc in the external wiring
La	≥	summation of Li in the device which receives energy + summation of inductance Lc in the external wiring

Example

We discuss the case where AAI141 of CENTUM I/O module, a power input module and EJA, a differential pressure transmitter of Yokogawa Electric Corporation are connected.

EJA is connected to the circuit of AAI141 via a 100m cable, and installed in a hazardous area of Class I, Division 2.

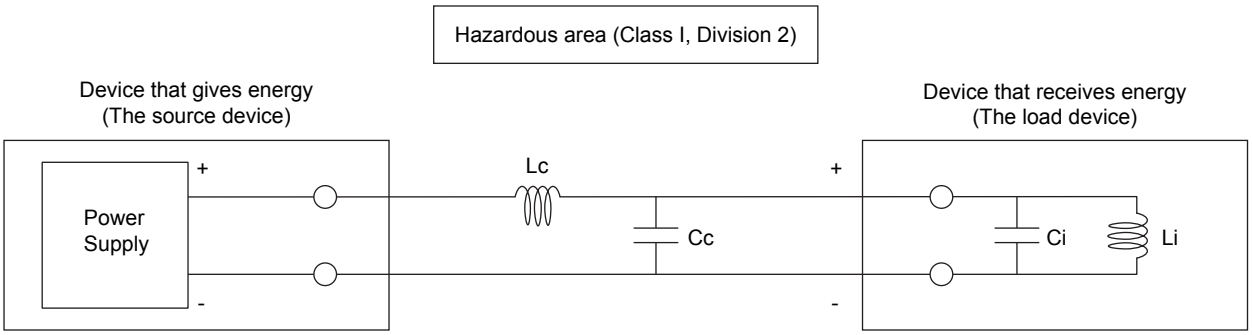

<CS 3000 AAI141>

<Differential pressure transmitter EJA>

The defined parameters have the following values.
(Voc) = 27.6 V
(Isc) = 27 mA
(Ca) = 0.19 mF
(La) = 2.7 mH
(Cn) = 0.19 mF at (Vn) = 27.6 V
(Ln) = 100 mH at (In) = 24.0 mA
and,
(Cc) = 200 pF/m X 100 m = 0.0002 mF X 100 = 0.02 mF
(Lc) = 0.66 mH/m X 100 m = 0.00066 mH X 100 = 0.066 mH

(Vmax) = 30 V
(Imax) = 165 mA
(Ci) = 0.0225 mF
(Li) = 0.73 mH

therefore,

Voc = 27.6 V	<	Vmax = 30 V
Isc = 27.0 mA	<	Imax = 165 mA
Ca = 0.19 mF	>	Ci + Cc = 0.0425 mF
La = 2.7 mH	>	Li + Lc =0.796 mH

The results above meet the combinational conditions. It can be judged that a field wiring can be installed in accordance with a general wiring construction.

F030103.ai

Figure Connection of AAI141 and EJA

Example of a Connection

Connecting ESB Bus Node Unit and a Device Installed in Division 2

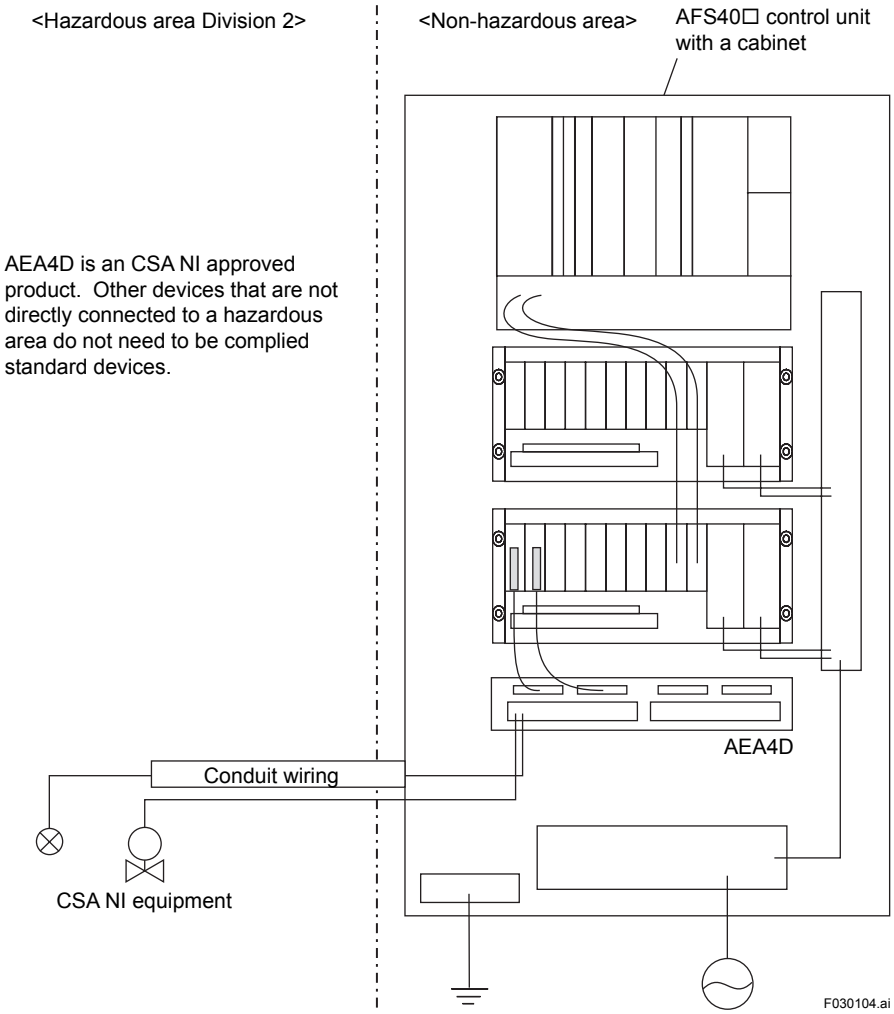

Figure Connecting ESB Bus Node Unit and a Device Installed in Division 2

- To connect with a field device, electrical parameters of each device should be met.
- To wire the devices that do not indicate electrical parameters, all wiring shall comply with Canadian Electrical Code Part I and Local Electrical Codes.

Installing ER Bus Node Unit in Division 2

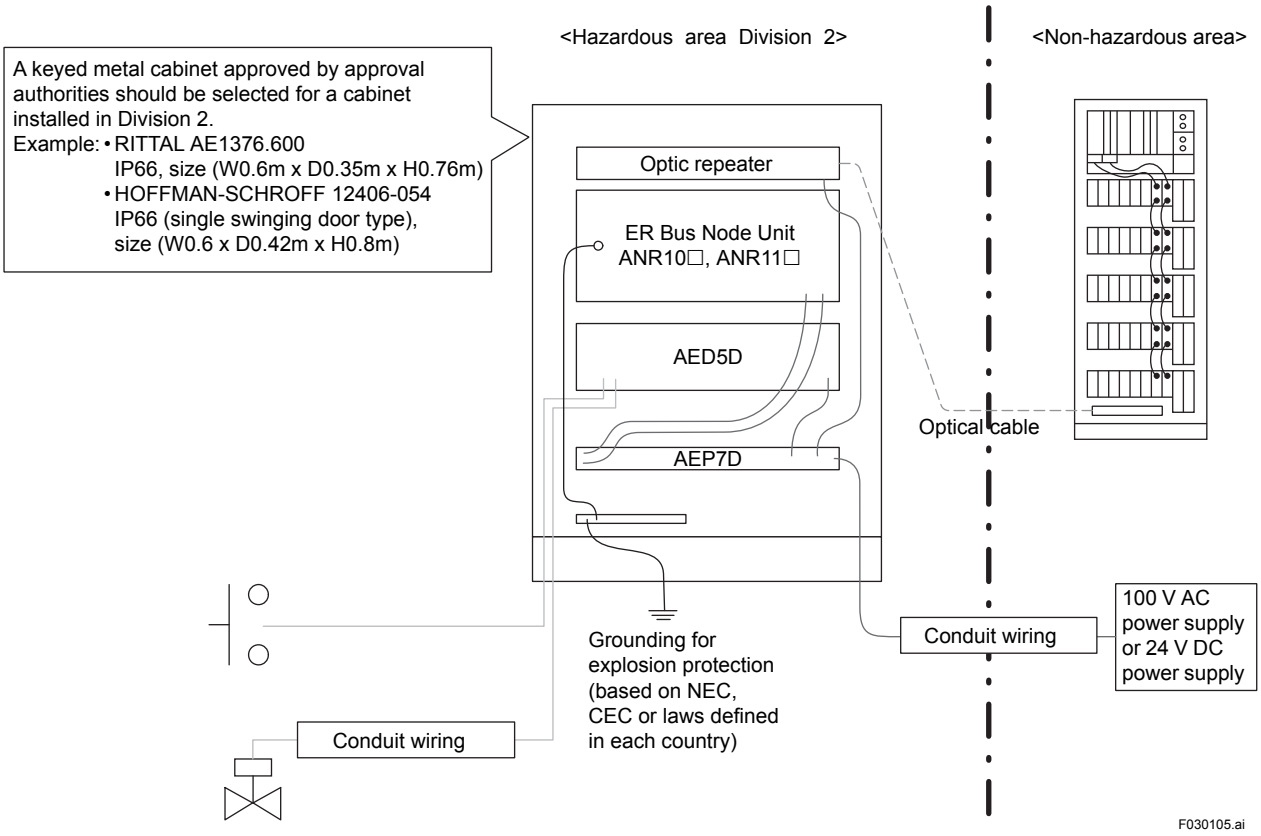

Figure Installing ER Bus Node Unit in Division 2

- To connect with a field device, electrical parameters of each device should be met.
- To wire the devices that do not indicate electrical parameters, all wiring shall comply with Canadian Electrical Code Part I and Local Electrical Codes.
- Use optical repeater (Network Devices) which can be installed in a hazardous area in Division 2.

Installing Optical ESB Bus Node Unit in Division 2 (Wiring by Optical cable for Optical ESB Bus)

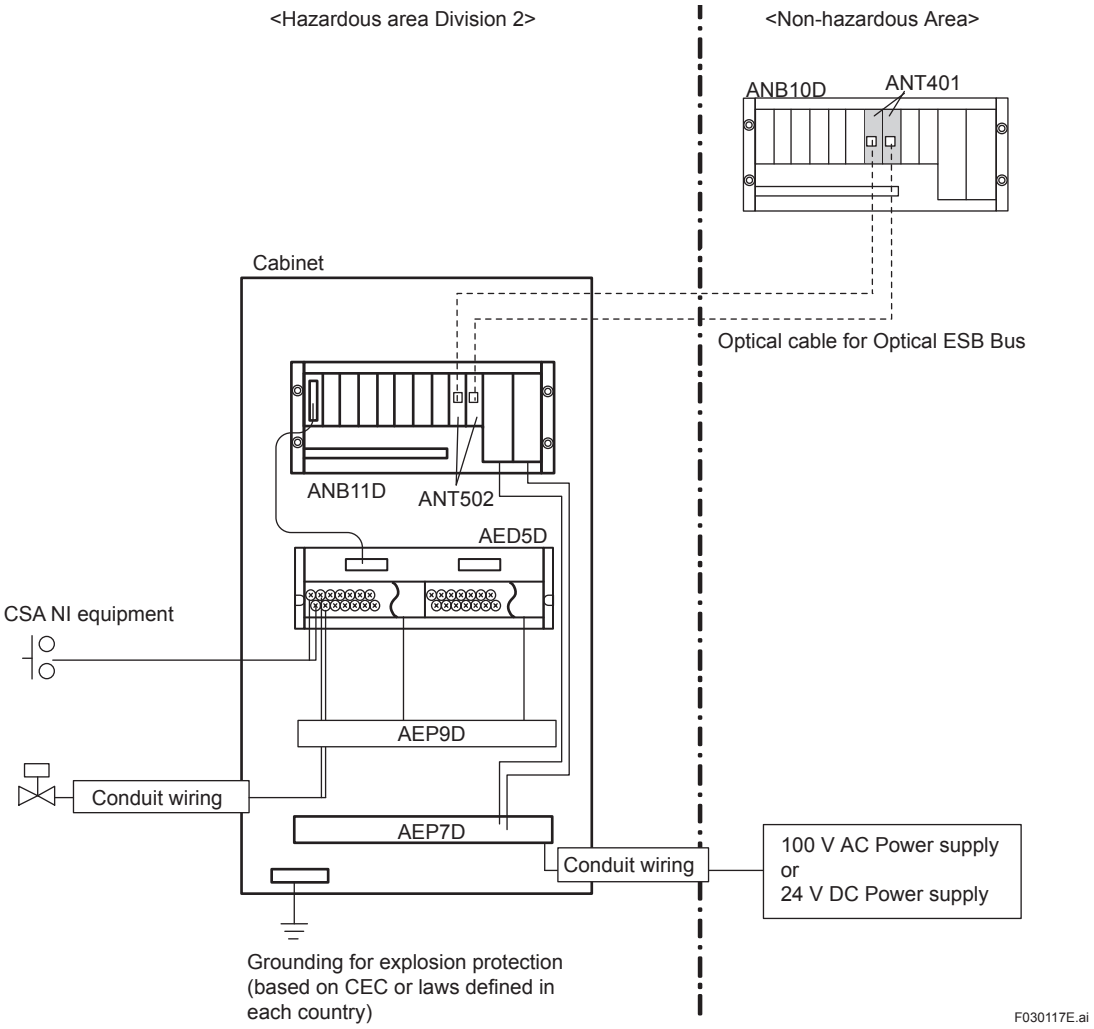

Figure Installing Optical ESB Bus Node Unit in Division 2 (Wiring by Optical cable for Optical ESB Bus)

- To connect with a field device, electrical parameters of each device should be met.
- To wire the devices that do not indicate electrical parameters, all wiring shall comply with Canadian Electrical Code Part I and Local Electrical Codes.

3.1.2 FM NI (FM Nonincendive)

A Field Control Unit (for Vnet/IP), a node unit for FIO/N-IO, an I/O module, and N-IO field enclosure of CENTUM have acquired NI of Factory Mutual (FM) safety certification.

This approval permit that the products above can be used in hazardous areas such as Class I and Division 2 and that the I/O module for FIO and base plate can be directly connected to an FM NI approved field device installed in hazardous areas such as Class I and Division 2.

In addition, I/O modules for FIO and base plate installed in non-hazardous areas can be directly connected to an FM NI approved field device installed in hazardous areas such as Class I and Division 2.

■ Complied Standards

Class I, Division 2, Groups A, B, C, and D, T4; (*1)
Non Sparking for Class I, Zone 2, AEx nA IIC T4 Gc hazardous (classified) locations with an ambient temperature rating of -20 °C to +60 °C. (*2)
Class 3600:2011 (*1)
Class 3611:2004 (*1)
Class 3810:2005 (*1)
ANSI/ISA 60079-0 (12.00.01)-2013 (*1) (*2)
ANSI/ISA 60079-15 (12.12.02)-2012 (*1) (*2)

*1: Applied for A2BN4D.
*2: A2BN4D complies with FM NI which enables the products to be installed in Zone2 hazardous area. But A2BN4D cannot be installed in that area because a node unit for N-IO such as I/O modules and node interface unit cannot be installed in that area.

Class I,Division 2,Groups A, B, C, and D, Temperature Class T4; (*3)
Non-Sparking Class I Zone 2 Group IIC, Temperature Class T4; hazardous (classified) locations. (*4)
Class 3600:2011 (*3)
Class 3611:2004 (*3)
Class 3810:2005 (*3)
ANSI/ISA-60079-0 (12.00.01)-2013 (*3) (*4)
ANSI/ISA-60079-15 (12.12.02)-2012 (*3) (*4)

*3: Applied for A2BN5D.
*4: A2BN5D is complies with FM NI which enables the products to be installed in Zone2 hazardous area. But A2BN5D cannot be installed in that area because a node unit for N-IO such as I/O modules and node interface unit cannot be installed in that area.

Class I,Division 2,Groups A, B, C, and D, Temperature code T4 (*5)
Class 3600:2011 (*5)
Class 3611:2004 (*5)
Class 3810:2005 (*5)
(for 100-120 V AC, 220-240 V AC, and 24 V DC power supply)

*5: Applied for products comply with FM Nonincendive, except for A2BN4D, A2BN5D, A2NN70D, A2NN60D, A2CB60, and A2CX100.

Class I, Division2, Groups A, B, C, and D, Temperature code T4 (*6)
FM 3600:2018 (*6)
FM 3611:2018 (*6)
FM 3810:2018 (*6)
ANSI/UL 121201 Ed. 9 (2019) (*6)
ANSI/UL 61010-1 Ed. 3 (2012) (*6)
ANSI/UL 61010-2-030 Ed. 1 (2012) (*6)
ANSI/UL 61010-2-201 Ed. 1 (2014) (*6)

*6: Applied for A2NN70D, A2NN60D, A2CB60, and A2CX100.

FM NI Approved Products and Their Configuration Example

The figure below is an example of the configuration of FM NI approved products that can be installed in hazardous areas. See the table “The List of FM NI Compliant Products” in Appendix for details.

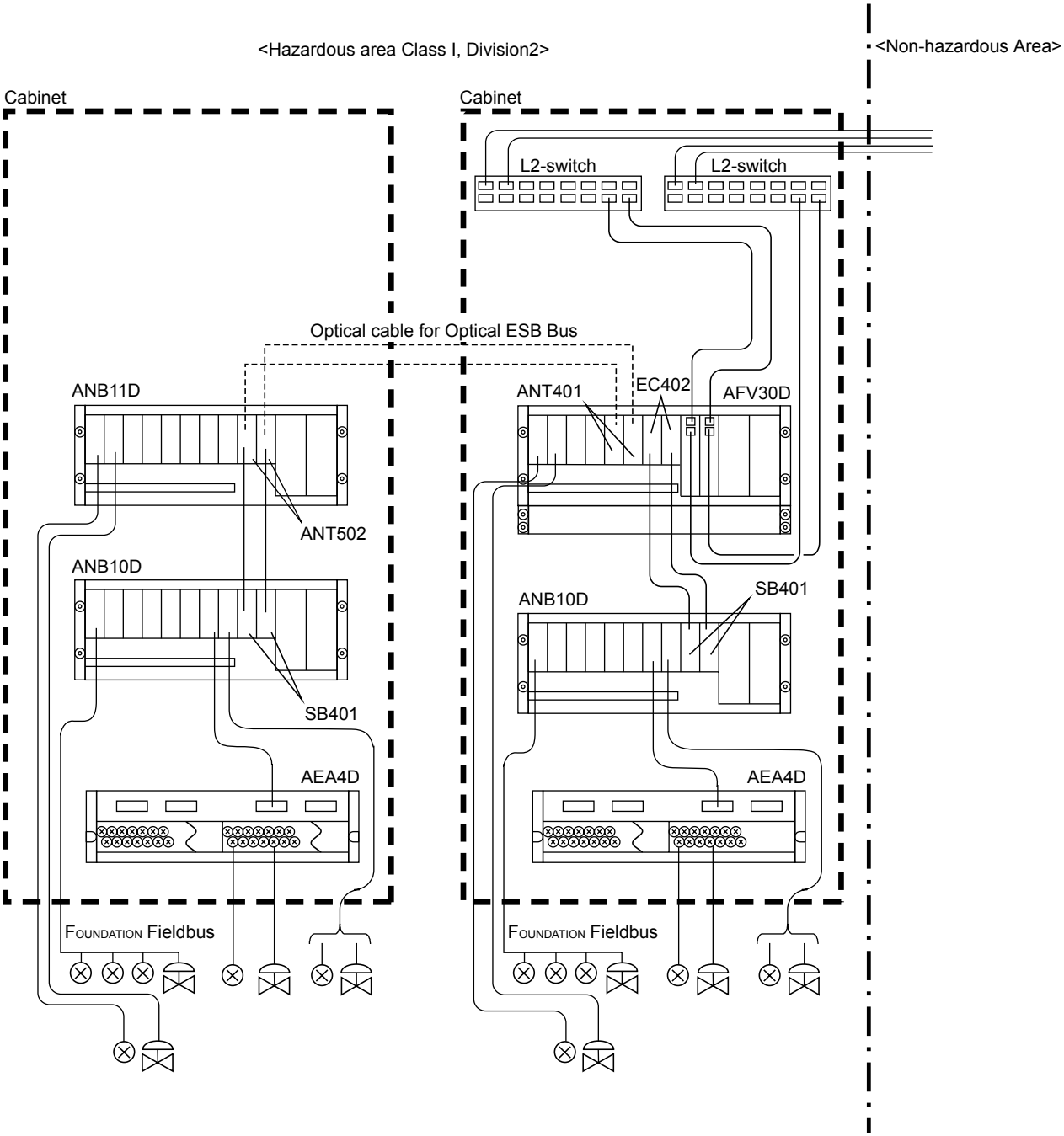

Figure Example of the configuration of FM NI approved products

F030108.ai

Special Condition for Use

The A2BN4D base plate for barrier shall be used with I/O module (A2MMM843) and MTL4500 module series of MTL products.

The A2BN5D base plate for barrier shall be used with I/O module (A2MMM843,A2MDV843) and P+F HIC module series.

Device Installation

- Devices must be installed by professionally trained personnel.
- Install devices according to NEC (National Electrical Code: ANSI/NFPA-70).
- When devices are installed in a hazardous area in Class I, Division2, put them in a metal cabinet with a key compliant with FM class 3810 and FM class 3600, or the one approved by FM or a local testing institution.
  When the devices to be connected to field devices in a hazardous area are installed in non-hazardous area, put them in a metal cabinet conforming to FM class 3810. (*1)
- Instructions provided in GS (General specifications), TI (Technical Information of Installation Guidance) and/or IM (User's Manuals) shall be observed.
- Precautions on device use
  - Cabinet door must be closed when devices are used.
  - Empty slots in a cabinet must be covered by a dedicated cover.
  - Each cable in a cabinet must be fixed.
  - A breaker to cut power supply must be installed in non-hazardous area so that power supply to the devices is cut under abnormal circumstances.
  - As for the precautions of N-IO field enclosure, refer to Appendix2. FM NI Control Drawing.

*1: Excluding N-IO field enclosure.

Maintenance

- Devices must be installed by professionally trained personnel or ask Yokogawa's service office. If devices are installed by person other than those above, FM NI approved products will be invalid.
- Do not perform maintenance on running devices installed in a hazardous area in Class I, Division 2.
  Disconnect modules and terminals installed in a hazardous area in Class I, Division 2 only for installation or maintenance.
- Initial and regular maintenance are also done by professionally trained personnel according to IEC 60079-17.

Wiring

- Devices must be wired by professionally trained personnel.
- Install explosion-proof wiring defined in NEC (National Electrical Code: ANSI/NFPA-70) or the code in the relevant country to wire devices with no indication of electrical parameters. Wiring the devices that indicate electrical parameters with the compliant devices can be a general wiring defined in the relevant country.

Power Supply Wiring

When field control unit (for Vnet/IP), node unit for FIO, power distribution unit and power supply module are installed in a hazardous area in Class I, Division 2, wire a power supply cable from a non-hazardous area by explosion-proof wiring (including metal conduit wiring).

When AED5D and A1BD5D are combined with ADV151, ADV161, ADV551 and ADV561, install an explosion-proof wiring defined in the relevant country for the wiring outside of the external power supply cable cabinet.

The power cable of N-IO field enclosure must be wired in accordance with the instructions provided in the related GS (General Specifications), TI (Installation Guidance) and IM (User's Manuals).

Signal Wiring

When an optical cable is installed in Class I, Division 2, general wiring defined in the relevant country is available. Optical cable does not emit energy to cause air explosion.

Install explosion-proof wiring defined in the relevant country for the following signal wiring:

- Wiring contact output terminals of field control unit outside of a cabinet
- Wiring Vnet/IP cable and ESB bus cable outside of a cabinet
- Wiring ER bus cable to be connected to EB402 and EB511 outside of a cabinet
- Wiring AAP135 outside of a cabinet when it is used as the source device (*1)
  General wiring defined in the relevant country can be installed according to the indicated electrical parameters for signal wiring of AAP135 outside of a cabinet when it is used as the load device (*1).
- Use DC power supply compliant with the Standard for Explosion Protection for combination of ADV151 and AED5D or A1BD5D, or that of ADV161 and AED5D or A1BD5D in contact input mode and voltage input mode. Connection according to the parameters of this power supply makes signal wiring outside of the cabinet compliant with the local standard. Please read the instruction on contact input mode wiring and the instruction on voltage input mode when you actually install wiring.
- Wiring outside of a cabinet in voltage output mode by a combination of ADV551 and AED5D or A1BD5D, or ADV561 and AED5D or A1BD5D.
  Wiring contact output mode outside of a cabinet according to the indicated electrical parameters is compliant with the local standard.
- Wiring outside of a cabinet to ALR111, ALR121 or ALE111.
- Wiring outside of a cabinet to ALF111
  When a barrier for field bus available in Class I, Division 2 is mounted in the same cabinet and connected, wiring to the field devices outside of the cabinet can be a general wiring defined in the relevant country.
- The signal cable of N-IO field enclosure must be wired in accordance with the instructions provided in the related GS (General Specifications), TI (Installation Guidance) and IM (User's Manuals).

*1: AAP135 is "the source device" in case of voltage-free contact input and voltage pulse input (when connected to signal names IN□B and IN□C). In other connections, it is "the load device."

Precaution

Please observe the following precautions while product is operating or under maintenance service.

WARNING

EXPOSURE TO SOME CHEMICALS MAY DEGRADE THE SEALING PROPERTIES OF MATERIALS USED IN THE FOLLOWING DEVICES; AFV10□ and AFV30□.

WARNING

EXPLOSION HAZARD. DO NOT REMOVE OR REPLACE LAMPS OR FUSES UNLESS POWER HAS BEEN DISCONNECTED OR WHEN A FLAMMABLE OR COMBUSTIBLE ATMOSPHERE IS PRESENT.

WARNING

EXPLOSION HAZARD. DO NOT DISCONNECT EQUIPMENT WHEN A FLAMMABLE OR COMBUSTIBLE ATMOSPHERE IS PRESENT.

WARNING

EXPLOSION HAZARD. DO NOT OPEN ENCLOSURE OR REPLACE BATTERY WHEN A FLAMMABLE OR COMBUSTIBLE ATMOSPHERE IS PRESENT.

WARNING

For the warning of N-IO field enclosure, refer to Appendix 2. FM NI Control Drawing.

Instruction on Contact Input Mode Wiring

When the number of channels is limited because power supply exceeds its capacity, but parallel connection for the purpose of increasing capacity is not allowed.
Mount ADV151, ADV161, AED5D, A1BD5D, AKB331 and AKB337 in the same cabinet.
When ADV151 or ADV161 is mounted in a cabinet different from that for AED5D or A1BD5D, apply explosion-proof wiring defined in each country for AKB331 or AKB337.

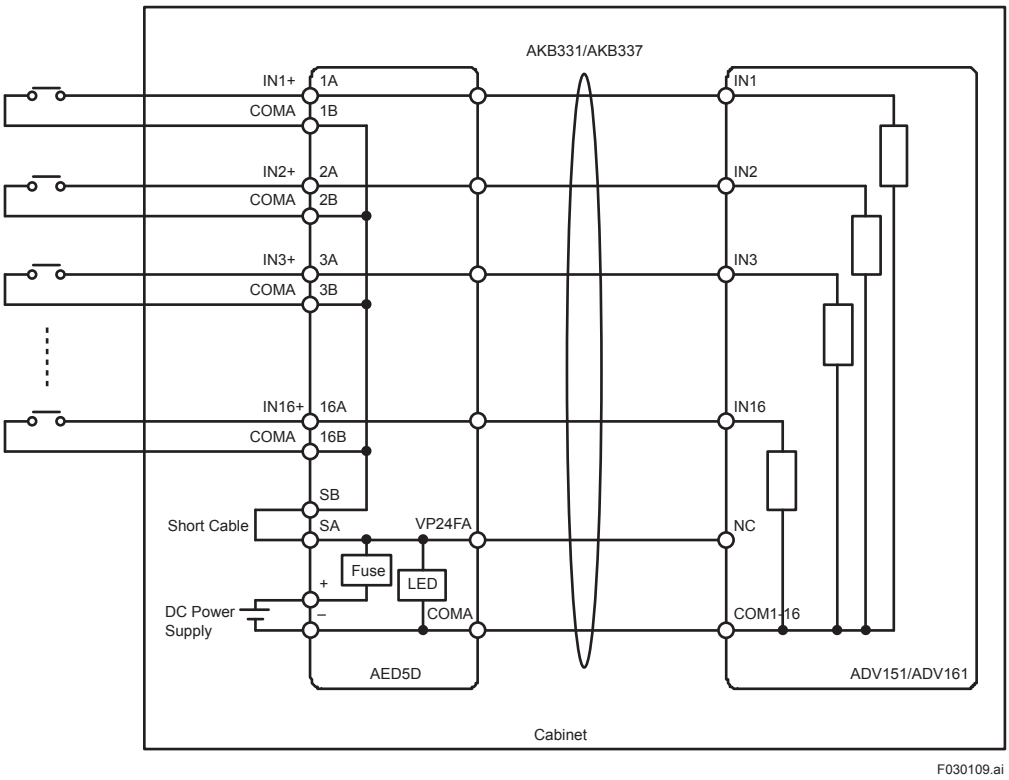

Figure Connection example of ADV151/ADV161 Contact Input Mode

Instruction on Voltage Input Mode Wiring

The total current value of the channels must be within the rated current (limit) for DC power supply.
But if the total current value exceeds the rated current, reduce the number of channels to be supplied at on time, and prepare the same DC power supply for each channel group.
In such a case, the polarity of power sources should be the same.
Mount ADV151, ADV161, AED5D, A1BD5D, AKB331 and AKB337 in the same cabinet.
When ADV151 or ADV161 is mounted in a cabinet different from that for AED5D or A1BD5D, apply explosion-proof wiring defined in each country for AKB331 or AKB337.

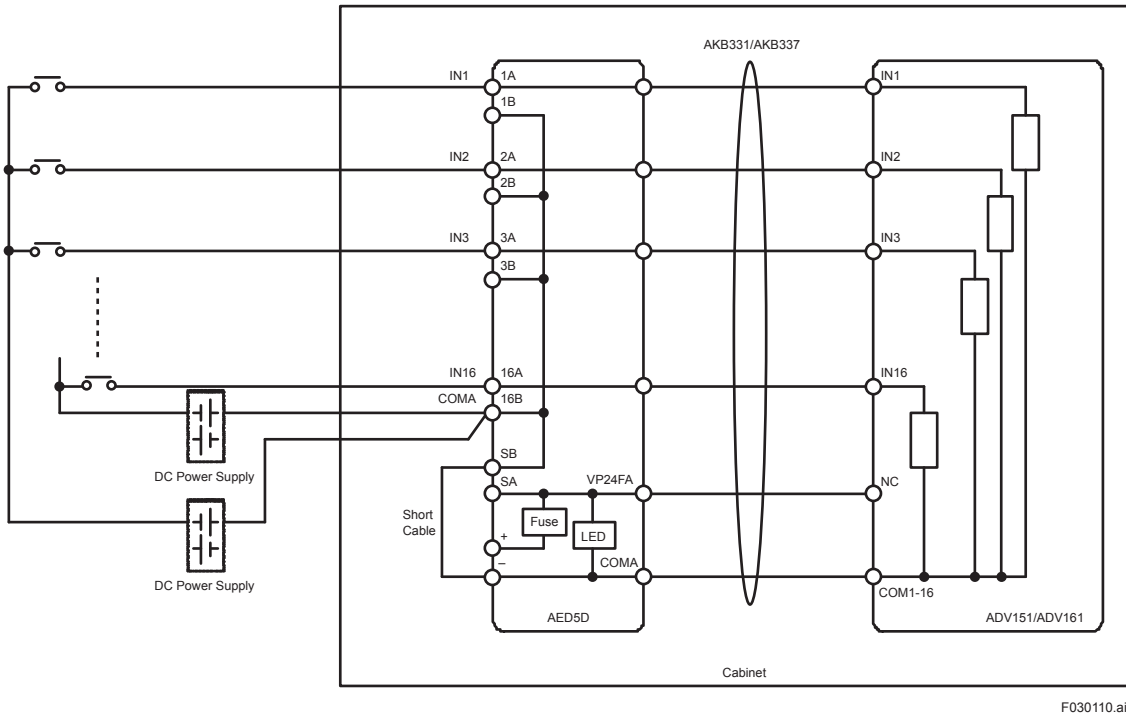

Figure Connection example of ADV151/ADV161 Voltage Input Mode

Parameters in Connection with FM NI Devices

Energy transfer influences FM NI properties. In order to maintain these properties, parameters must be displayed when FM NI devices are connected.

To display parameters, FM NI devices are divided into the device that gives energy and the device that receives energy.

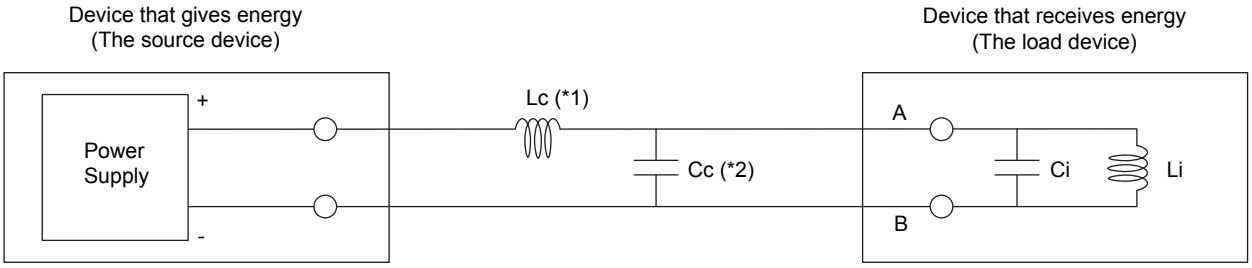

Displayed parameters
Voc: maximum open-circuit output voltage
Isc: maximum short-circuit output current
Ca: maximum allowable capacitance
La: maximum allowable inductance

*1: Lc: inductance of the external wiring
*2: Cc: capacitance of the external wiring

Displayed parameters
Vmax: maximum input voltage
Imax: maximum input current
Ci: maximum internal capacitance
Li: maximum internal inductance

F030115.ai

Figure Connection of FM NI Devices and Associated Parameters

How to Compare Parameters

How to compare parameters when the device that gives energy and the device that receives energy are connected is in the following. If the parameters satisfy the following formulas, a FM NI explosion-proof device can be connected in a general wiring. Otherwise, the wiring should be installed to conform to NEC (National Electrical Code: ANSI/NFPA-70) or an explosion-proof wiring defined in the relevant country.

Device that gives energy		Device that receives energy
Voc	≤	Vmax
Isc	≤	Imax
Ca	≥	summation of Ci in the device which receives energy + summation of capacitance Cc in the external wiring
La	≥	summation of Li in the device which receives energy + summation of inductance Lc in the external wiring

Example of a Connection

Connecting ESB Bus Node Unit and a Device Installed in Class I, Division 2

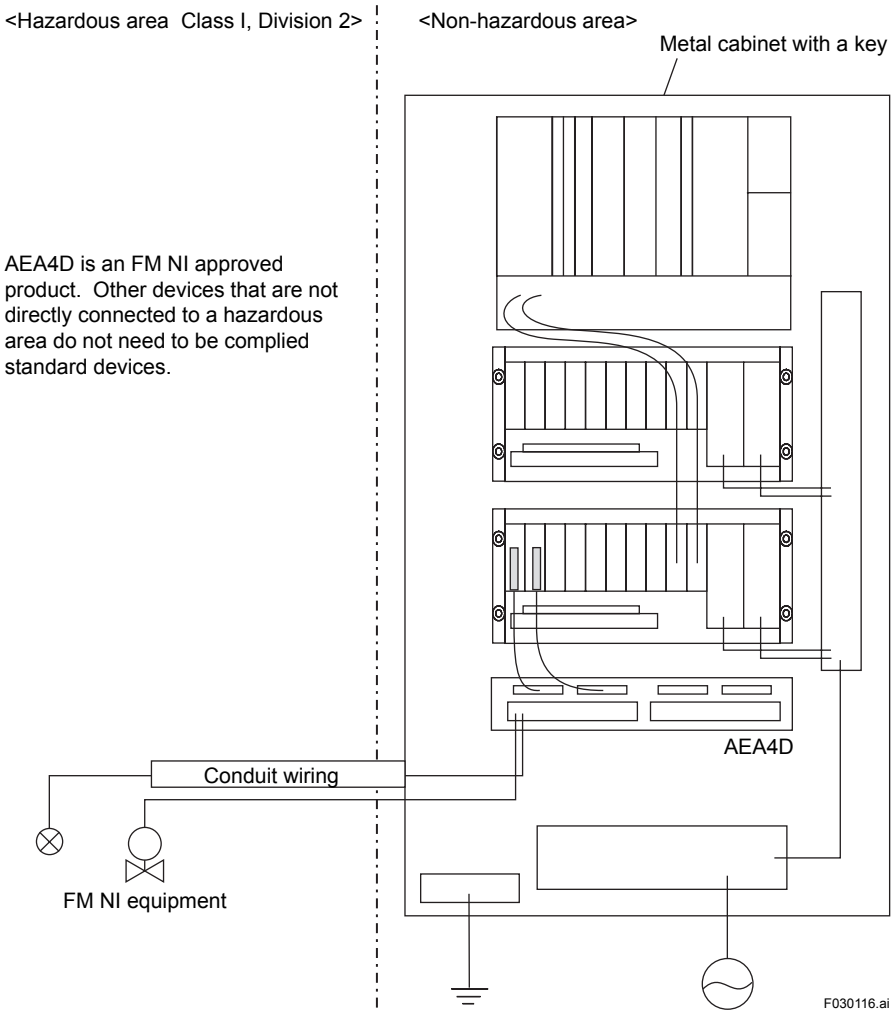

Figure Connecting ESB Bus Node Unit and a Device Installed in Class I, Division 2

- To connect with a field device, electrical parameters of each device should be met.
- To wire the devices that do not indicate electrical parameters, apply an explosion-proof wiring (threaded conduit wiring) defined in NEC (National Electrical Code: ANSI/NFPA-70) or in each country. In addition, wiring the devices that indicate electrical parameters with the compliant devices can be a general wiring defined in each country.

Installing ER Bus Node Unit in Class I, Division 2 (Wiring by ER Bus)

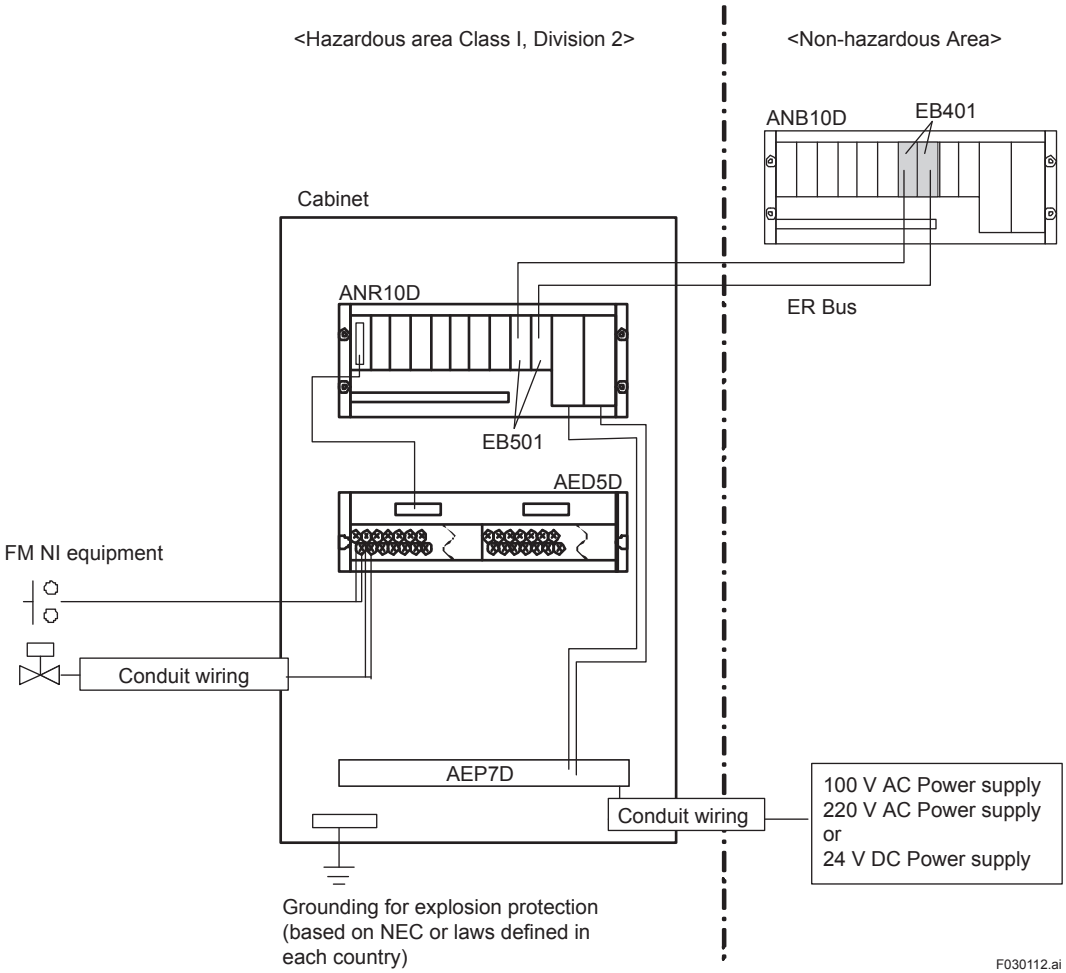

Figure Installing ER Bus Node Unit in Class I, Division 2 (Wiring by ER Bus)

- To connect with a field device, electrical parameters of each device should be met.
- To wire the devices that do not indicate electrical parameters, apply an explosion-proof wiring (including threaded conduit wiring) defined in NEC (National Electrical Code: ANSI/NFPA-70) or in each country. In addition, wiring the devices that indicate electrical parameters with the compliant devices can be a general wiring defined in each country.

Installing ER Bus Node Unit in Class I, Division 2 (Wiring by Optical cable for ER Bus)

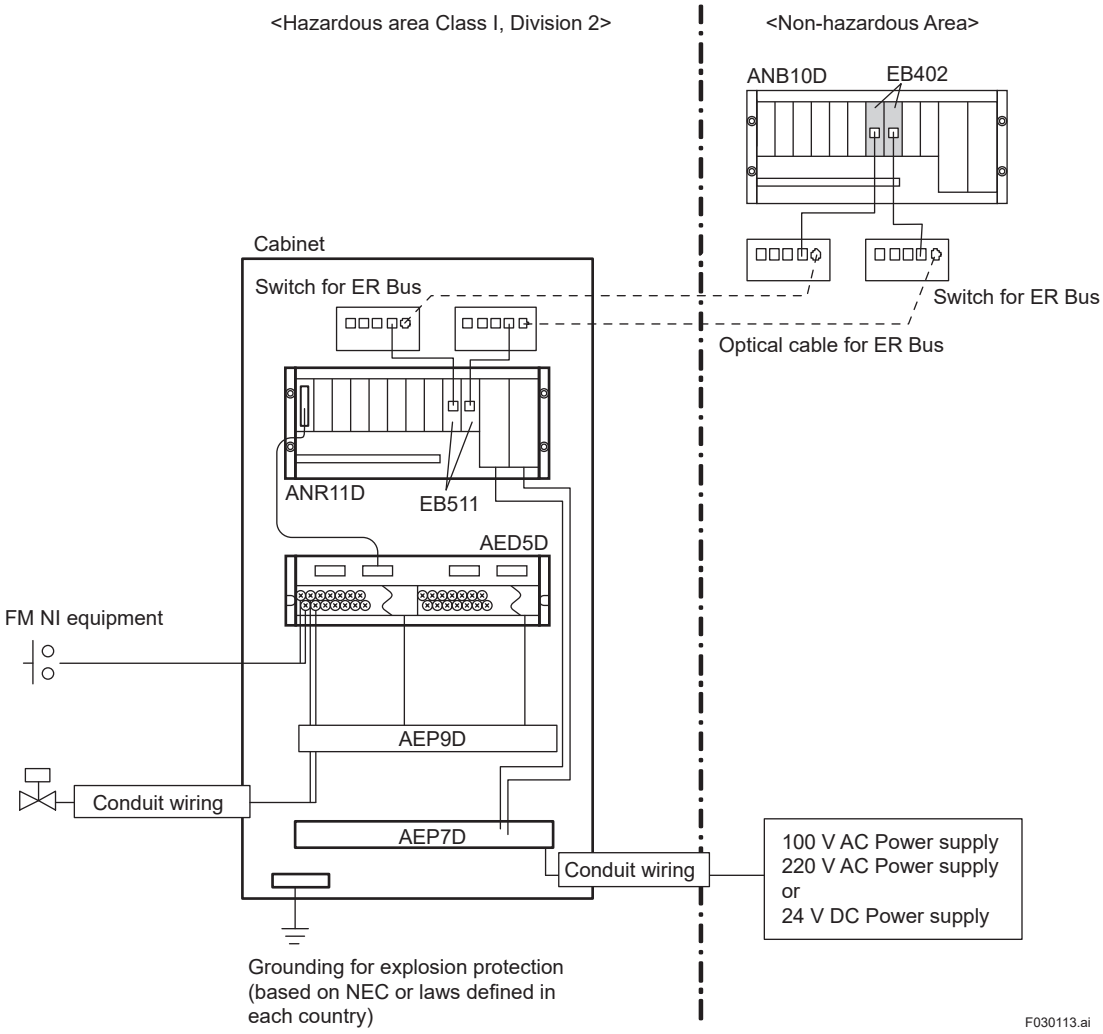

Figure Installing ER Bus Node Unit in Class I, Division 2 (Wiring by Optical cable for ER Bus)

- To connect with a field device, electrical parameters of each device should be met.
- To wire the devices that do not indicate electrical parameters, apply an explosion-proof wiring (including threaded conduit wiring) defined in NEC (National Electrical Code: ANSI/NFPA-70) or in each country. In addition, wiring the devices that indicate electrical parameters with the compliant devices can be a general wiring defined in each country.
- Use ER bus switch (Network Devices) which can be installed in a hazardous area in Class I, Division 2.

Installing Optical ESB Bus Node Unit in Class I, Division 2 (Wiring by Optical cable for Optical ESB Bus)

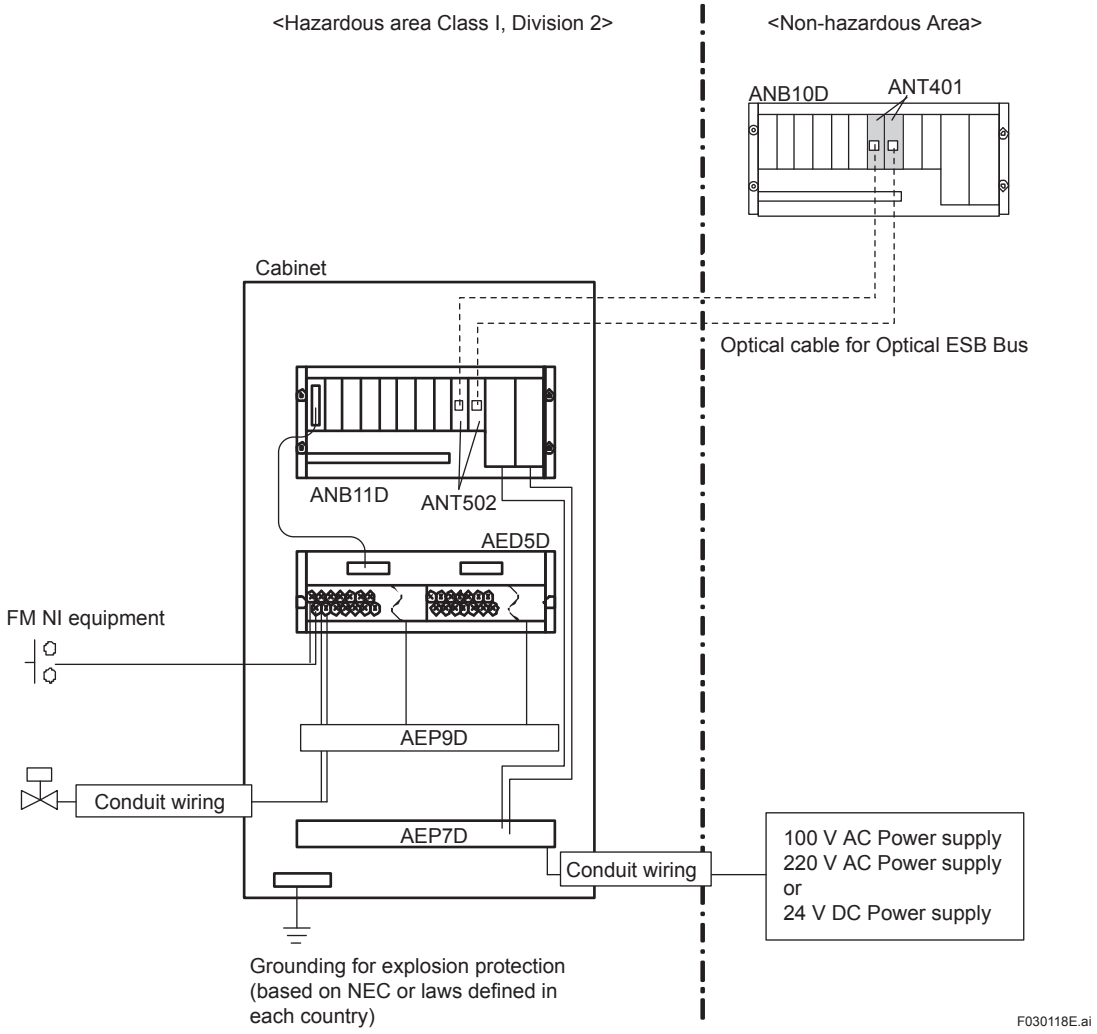

Figure Installing Optical ESB Bus Node Unit in Class I, Division 2 (Wiring by Optical cable for Optical ESB Bus)

- To connect with a field device, electrical parameters of each device should be met.
- To wire the devices that do not indicate electrical parameters, apply an explosion-proof wiring (including threaded conduit wiring) defined in NEC (National Electrical Code: ANSI/NFPA-70) or in each country. In addition, wiring the devices that indicate electrical parameters with the compliant devices can be a general wiring defined in each country.

Installing a FCS or ESB Bus Node Unit in Class I, Division 2

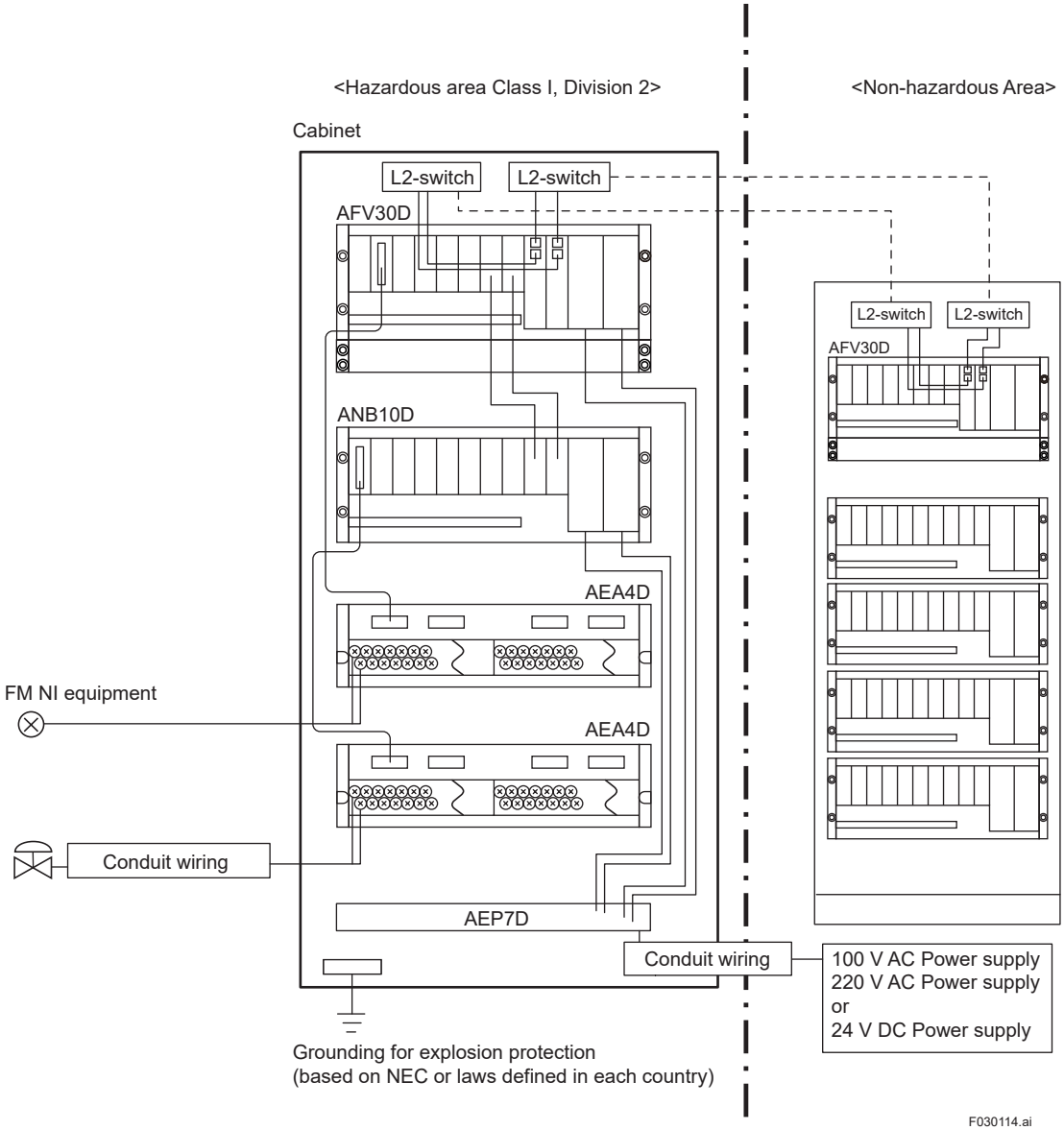

Figure Installing a FCS or ESB Bus Node Unit in Class I, Division 2

- To connect with a field device, electrical parameters of each device should be met.
- To wire the devices that do not indicate electrical parameters, apply an explosion-proof wiring (including threaded conduit wiring) defined in NEC (National Electrical Code: ANSI/NFPA-70) or in each country. In addition, wiring the devices that indicate electrical parameters with the compliant devices can be a general wiring defined in each country.
- Use L2 switch (Network Devices) which can be installed in a hazardous area in Class I, Division 2.

3.2 Type “n”, “ec”

Type “n” is a construction that enhances safety not to cause a spark, an arc or high surface temperatures in a normal operation and also to avoid causing a spark, an arc or high surface temperatures under defined conditions such as an overload.

A Field Control Unit (for Vnet/IP), a node unit for FIO/N-IO and an I/O module of CENTUM have acquired ATEX Type “n”. And a Field Control Unit (for Vnet/IP), a node unit for FIO/N-IO, and a communication module of CENTUM have acquired IECEx Type “n”.
An N-IO field enclosure has acquired ATEX Type “n”, “ec” and IECEx Type “n”, “ec”.

This approval permits that the products above can be used in hazardous areas such as Zone 2.

3.2.1 ATEX Type “n”, “ec”

■ Complied Standards

[Explosion-proof specifications]
Ⓔx II 3 G Ex nA IIC T4 Gc X (*1) (*3)
Ⓔx II 3 G Ex nA nC IIC T4 Gc X (*2) (*3)

[Complied standard]
EN 60079-0:2012+A11:2013
EN 60079-15:2010
(for 24 V DC power supply)

Note: Regarding the latest conformity standard, refer to the GS 33J01A10-01EN “Integrated Production Control System CENTUM VP System Overview”.
Note: Only N-IO field enclosure complies with ATEX Increased safety “ec”.
*1: Applied for products complied with ATEX Type “n”, except for AFV10S, AFV10D, AFV30S, AFV30D, ANB10S, ANB10D, ANB11S, ANB11D, A1BD5D, A2FV50S, A2FV50D, A2ZN3D, A2ZN70D, A2ZN60D, and A2CB60.
*2: Applied for the below products.
AFV10S, AFV10D, AFV30S, AFV30D, ANB10S, ANB10D, ANB11S, ANB11D, A1BD5D, A2FV50S, A2FV50D, and A2ZN3D
*3: “Type of protection” of the below products is indicated together with modules installed in.
AFV10S, AFV10D, AFV30S, AFV30D, ANB10S, ANB10D, ANB11S, ANB11D, ANT10U, AW810D, A2FV50S, A2FV50D, and A2ZN3D

[Explosion-proof specifications]
Ⓔx II 3 (1) G Ex nA [ia Ga] IIC T4 Gc (*1)

[Complied standard]
EN 60079-0:2012+A11:2013
EN 60079-15:2010

Note: Regarding the latest conformity standard, refer to the GS 33J01A10-01EN “Integrated Production Control System CENTUM VP System Overview”.
Note: Only N-IO field enclosure complies with ATEX Increased safety “ec”.
*1: Applied for A2BN5D.

[Explosion-proof specifications]
Ⓔx II 3G Ex ec nC IIC T4 Gc X (*1)
Ⓔx II 3G Ex ec IIC T4 Gc X (*2)

[Complied standard]
EN IEC 60079-0:2018 (*1) (*2)
EN IEC 60079-7:2015 + A1:2018 (*1) (*2)
EN IEC 60079-15:2019 (*1)

Note: Regarding the latest conformity standard, refer to the GS 33J01A10-01EN “Integrated Production Control System CENTUM VP System Overview”.
*1: Applied for A2ZN70D and A2ZN60D.
*2: Applied for A2CB60.

3.2.2 IECEx Type “n”, “ec”

Complied Standards

[Explosion-proof specifications]
Ex nA [ia Ga] IIC T4 Gc (*1)
Ex nA nC IIC T4 Gc (*2)
Ex nA IIC T4 Gc (*3)

[Complied standard]
IEC 60079-0:2011
IEC 60079-15:2010

Note: Only N-IO field enclosure complies with IECEx Increased safety “ec”.
*1: Applied for A2BN5D.
*2: Applied for the below products.
A2FV50S, A2FV50D, and A2SDV506
*3: Applied for products complied with IECEx Type “n”, except for A2BN5D, A2FV50S, A2FV50D, A2DV506, A2NN70D, A2NN60D, and A2CB60.

[Explosion-proof specifications]
Ex ec nC IIC T4 Gc (*1)
Ex ec IIC T4 Gc (*2)

[Complied standard]
IEC 60079-0 Ed. 7.0 (2017) (*1) (*2)
IEC 60079-7 Ed. 5.1 (2017) (*1) (*2)
IEC 60079-15 Ed. 5.0 (2017) (*1)

Note: Regarding the latest conformity standard, refer to the GS 33J01A10-01EN “Integrated Production Control System CENTUM VP System Overview”.
*1: Applied for A2NN70D and A2NN60D.
*2: Applied for A2CB60.
If A2CB60 and A2NN60D are provided as individual products, the Ex marking on the outside of the enclosure shows the information about A2CB60 only. Information about A2NN60D is not included.

3.2.3 ECAS-Ex Type “n”

Complied Standards

[Explosion-proof specifications]
Ex nA nC IIC T4 Gc (*1)
Ex nA IIC T4 Gc (*2)

[Complied standard]
IEC 60079-0: 2011
IEC 60079-15: 2010

Refer to descriptions for IECEx Type “n” on this document for installation and precautions for ECAS-Ex Type “n”.

*1: Applied for the below products.
A2FV50S, A2FV50D, and A2SDV506
*2: Applied for products complied with ECAS-Ex Type “n”, except for A2FV50S, A2FV50D, and A2DV506.

Type “n” Approved Products and Their Configuration Example

The figure below is an example of the configuration of Type “n” compliant products that can be installed in hazardous areas. See the table “The List of Type “n” Compliant Products” described in Appendix for detail.

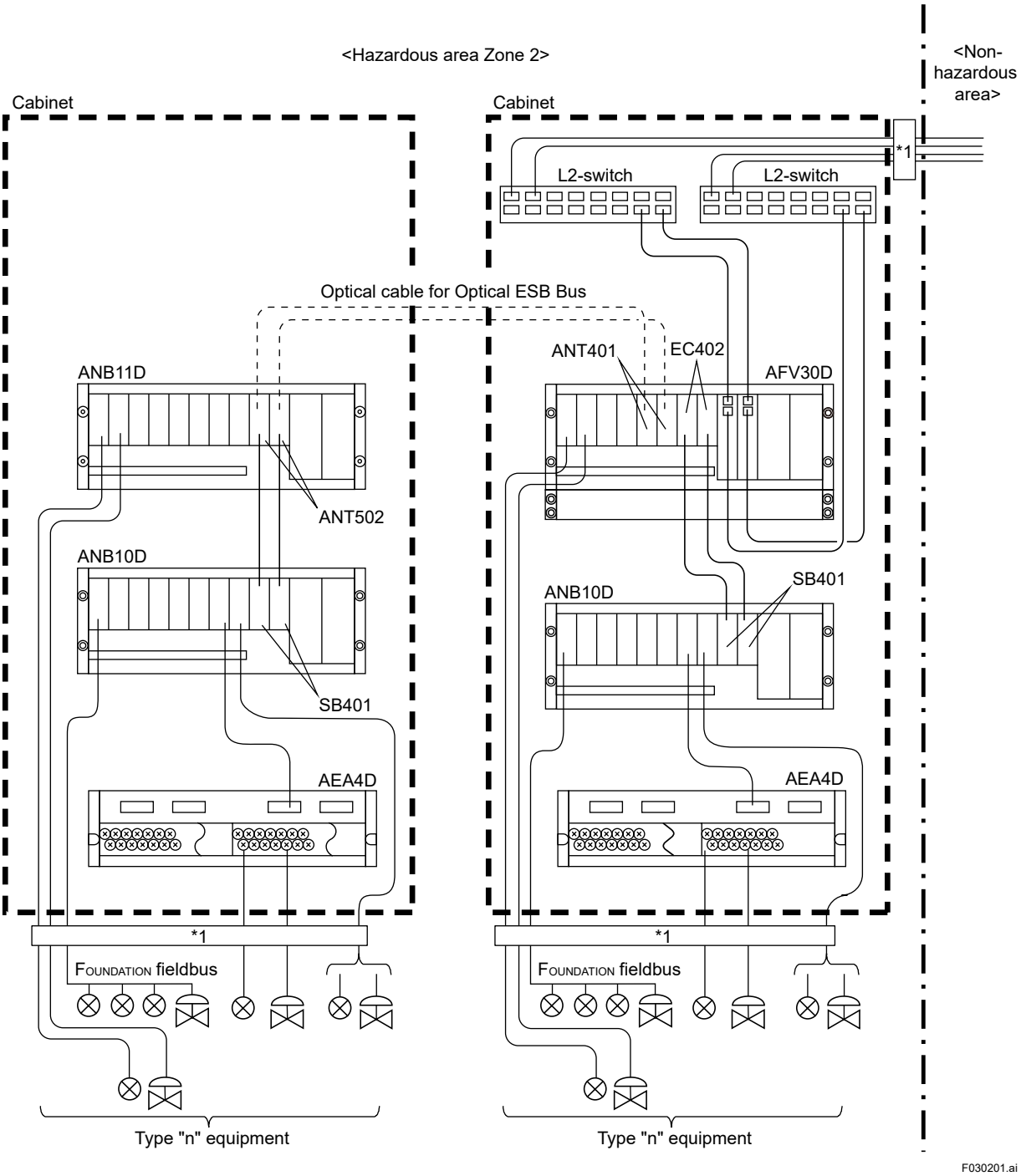

*1: Explosion-proof wiring that is defined in EN/IEC 60079-14, and the rules/standards of each country or region.

Figure Example of the configuration of Type “n” approved products 1

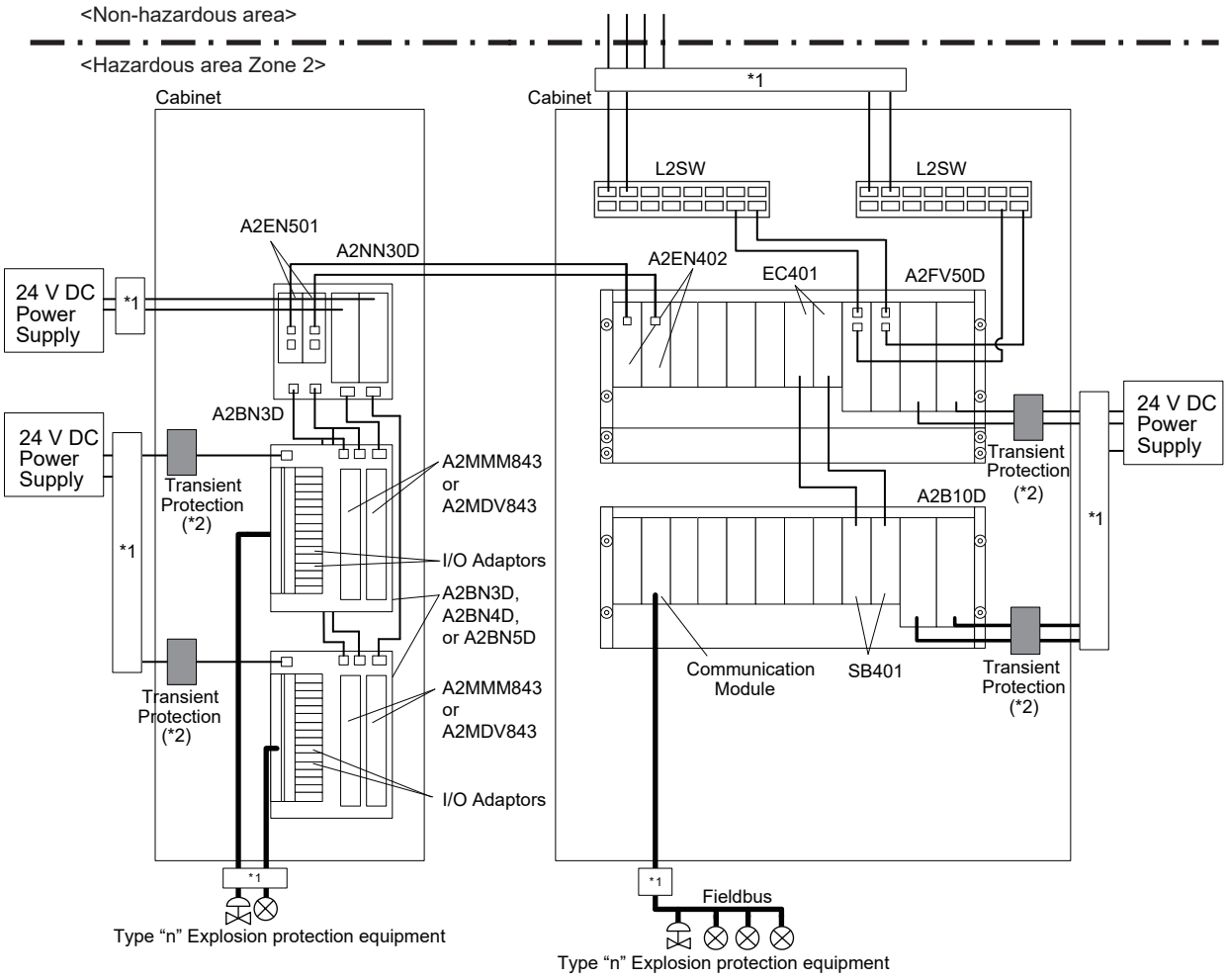

*1: Explosion-proof wiring that is defined in EN/IEC 60079-14, and the rules/standards of each country or region.
*2: Transient protection shall be provided that is set at a level not exceeding 119 V d. c. at the supply terminal of A2BN3D, A2BN4D, and A2BN5D to the equipment.

Figure Example of the configuration of Type "n" approved products 2

Precautions

Refer to CENTUM VP Explosion Protection (ATEX/IECEx) (IM 33K01J30-50E) for the installation and the precaution for Type “n” compliant devices.

Refer to CENTUM VP Explosion Protection (ATEX/IECEx) (IM 33K01J30-50E) for the installation, the precaution, maintenance and repair for N-IO field enclosure.

Specific conditions of use

- When the equipment are located in hazardous areas, they shall be installed in metal cabinets with locks and keys which provides a degree of protection not less than IP54 in accordance with EN/IEC 60079-15.
- The equipment shall be accordingly located in areas of not more than pollution degree 2 (defined in EN/IEC 60664-1) to prevent adverse environmental conditions caused by foreign solid particles, dust and water etc.
- The equipment shall be used within -10 %/+10 % of specified input 24 V DC with including ripple at the power supply terminals.
- Transient protection shall be provided that is set at a level not exceeding 119 V d. c. at the supply terminal to the equipment.

Installation

- The equipment shall be installed and used within their ratings and electrical parameters.
- All equipment and wiring in hazardous areas shall be installed in accordance with EN/IEC 60079-14 and related local electrical codes and the installation shall also comply with the appropriate requirements for non-hazardous areas.
- Instructions provided in GS (General specifications), TI (Technical Information of Installation Guidance) and/or IM (User’s Manuals) shall be observed.
- The installation shall be carried out only by qualified personnel whose training has included instruction on the type of protection and installation practices, relevant rules and regulations and general principles of area classification.
- The degree of protection not less than IP54 shall be maintained at cable entries into the cabinet.
- It must be observed during the installation that the venting slots of the equipment are not blocked off by cable parts, fixing accessories etc.
- Screws of terminals for field wiring connections shall be tightened with specified torque values.
- On completion of the installation and prior to first use, initial inspection of the equipment and installation shall be carried out in accordance with EN/IEC 60079-17.
- Abide by the following guidance so as to ensure the safety and performance.
  - Make sure that all the empty slots in the cabinet should be properly covered with attached caps.
  - Make sure that all the cables are rigidly fixed in the cabinet.
- Field wiring for Ethernet communication and Vnet/IP network must be in accordance with IEEE 802.3 so as to avoid overvoltage of > 119 V.

Maintenance and Repair

- Inspections and maintenance of the equipment and installations shall be carried out only by qualified personnel and in accordance with EN/IEC 60079-17.
- Repair, overhaul, reclamation of the equipment shall be carried out only by qualified personnel and in accordance with EN/IEC 60079-19.
- Repairs of the equipment shall be carried out only by trained, experienced, skilled, knowledgeable and/or supervised personnel, or by the service engineers recognized by Yokogawa. Otherwise, the type of protection may be invalidated.
- Modifications shall not be made to the equipment which are operated in hazardous areas.

WARNING

WHEN AN EXPLOSIVE ATMOSPHERE IS PRESENT,

DO NOT OPEN THE CABINET WHILE THE EQUIPMENTS ARE ENERGIZED.

WARNING

WHEN AN EXPLOSIVE ATMOSPHERE IS PRESENT,

DO NOT REMOVE OR REPLACE THE FUSE WHEN ENERGIZED.

WARNING

WHEN AN EXPLOSIVE ATMOSPHERE IS PRESENT,

DO NOT SEPARATE THE CONNECTIONS WHEN ENERGIZED.

Instruction on Contact Input Mode Wiring

When the number of channels is limited because power supply exceeds its capacity, but parallel connection for the purpose of increasing capacity is not allowed.

Mount ADV151, ADV161, AED5D, A1BD5D, AKB331 and AKB337 in the same cabinet.

When ADV151 or ADV161 is mounted in a cabinet different from that for AED5D or A1BD5D, apply explosion-proof wiring defined in each country for AKB331 or AKB337.

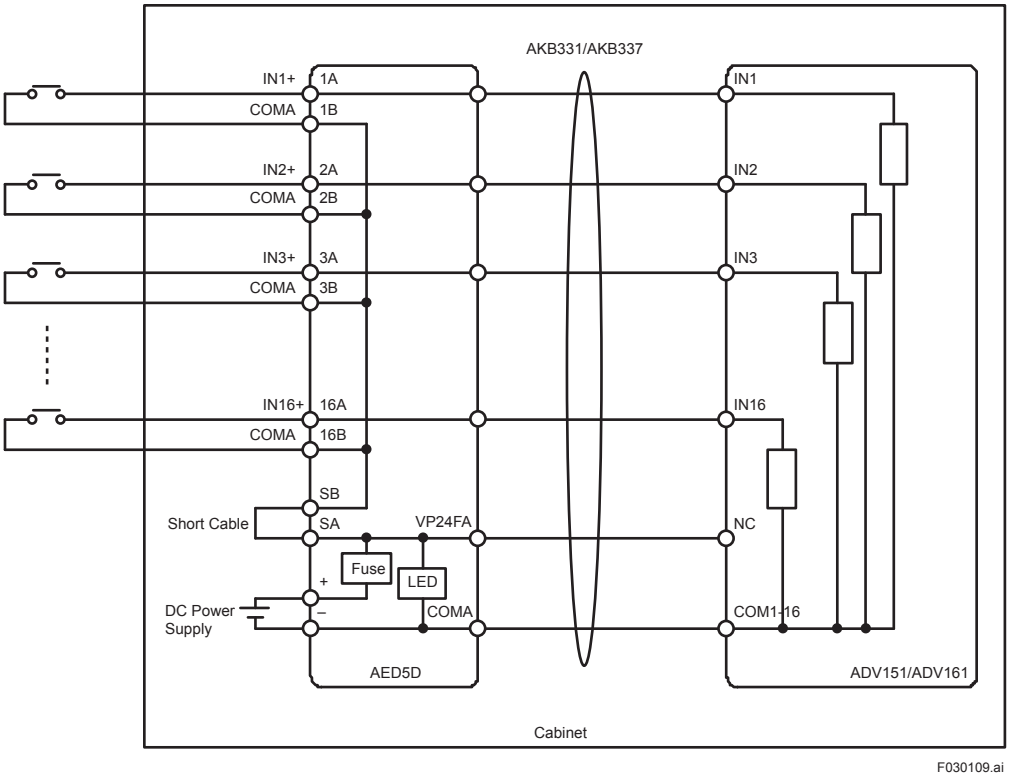

Figure Connection example of ADV151/ADV161 Contact Input Mode

Instruction on Voltage Input Mode Wiring

The total current value of the channels must be within the rated current (limit) for DC power supply.
But if the total current value exceeds the rated current, reduce the number of channels to be supplied at on time, and prepare the same DC power supply for each channel group.
In such a case, the polarity of power sources should be the same.
Mount ADV151, ADV161, AED5D, A1BD5D, AKB331 and AKB337 in the same cabinet.
When ADV151 or ADV161 is mounted in a cabinet different from that for AED5D or A1BD5D, apply explosion-proof wiring defined in each country for AKB331 or AKB337.

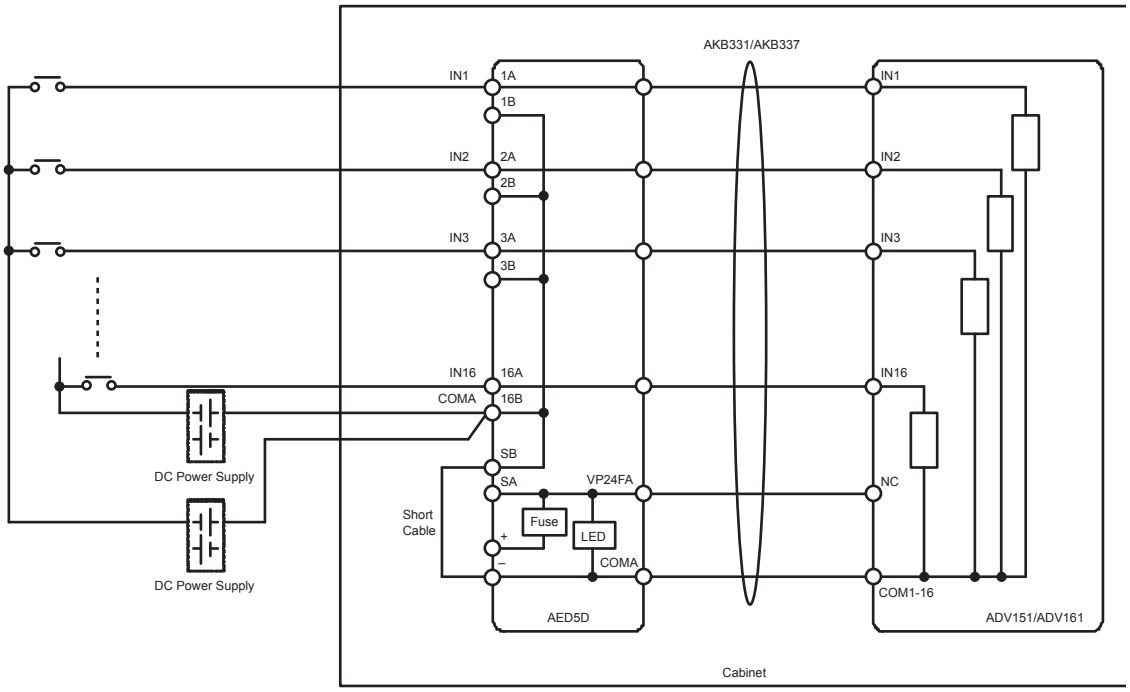

F030110.ai

Figure Connection example of ADV151/ADV161 Voltage Input Mode

Example of a Connection

Connecting ESB Bus Node Unit and a Device Installed in Zone 2

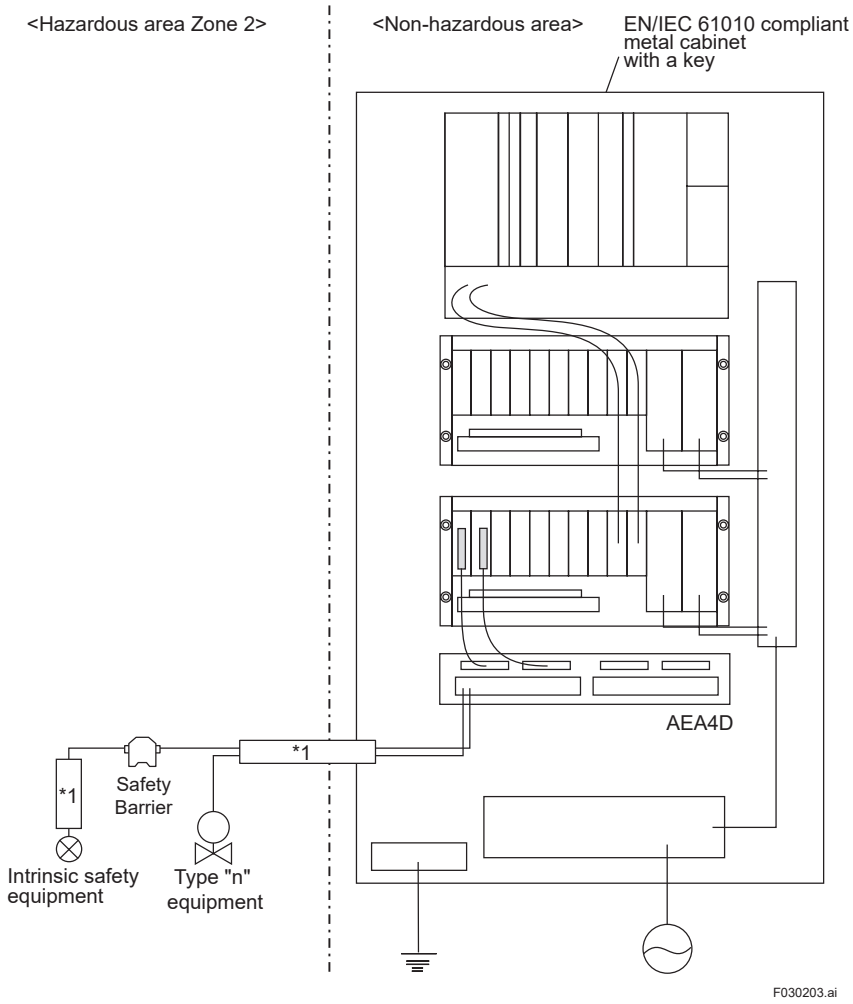

*1: Explosion-proof wiring that is defined in EN/IEC 60079-14 and the rules/standards of each country or region.

Figure Connecting ESB Bus Node Unit and a Device Installed in Zone 2

Installing ER Bus Node Unit in Zone 2 (Wiring by ER Bus)

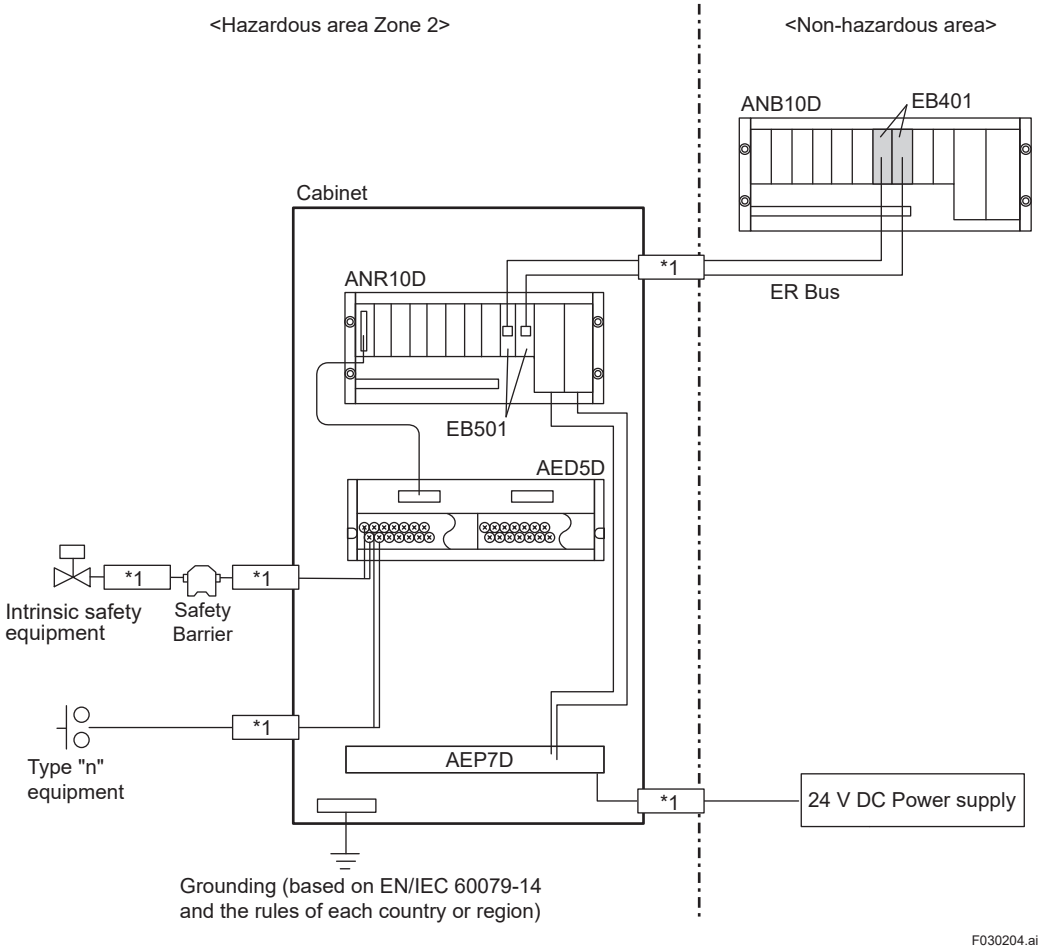

*1: Explosion-proof wiring that is defined in EN/IEC 60079-14 and the rules/standards of each country or region.

Figure Installing ER Bus Node Unit in Zone 2 (Wiring by ER Bus)

Installing ER Bus Node Unit in Zone 2 (Wiring by Optical cable for ER Bus)

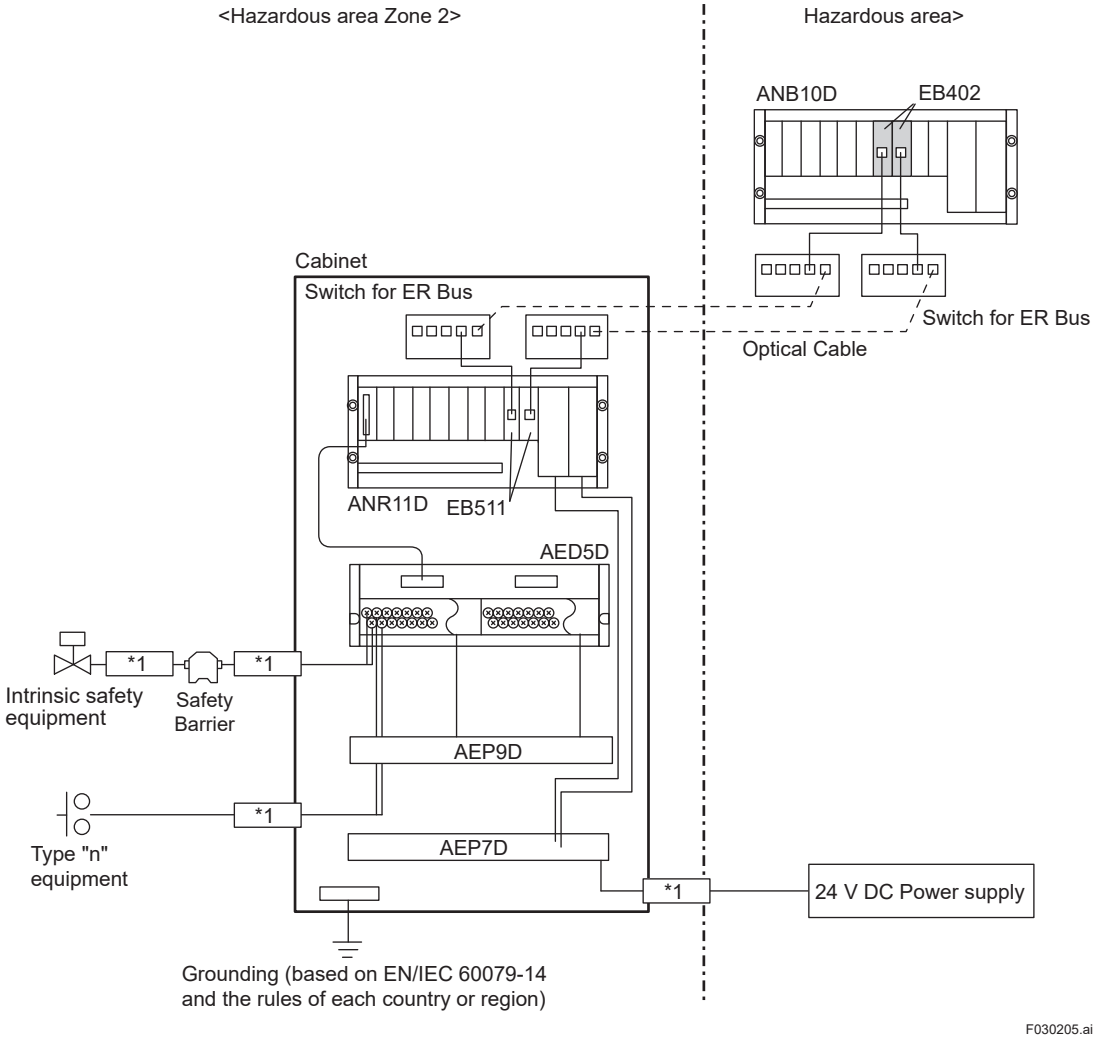

*1: Explosion-proof wiring that is defined in EN/IEC 60079-14 and the rules/standards of each country or region.

Figure Installing ER Bus Node Unit in Zone 2 (Wiring by Optical cable for ER Bus)

Installing Optical ESB Bus Node Unit in Zone 2 (Wiring by Optical cable for Optical ESB Bus)

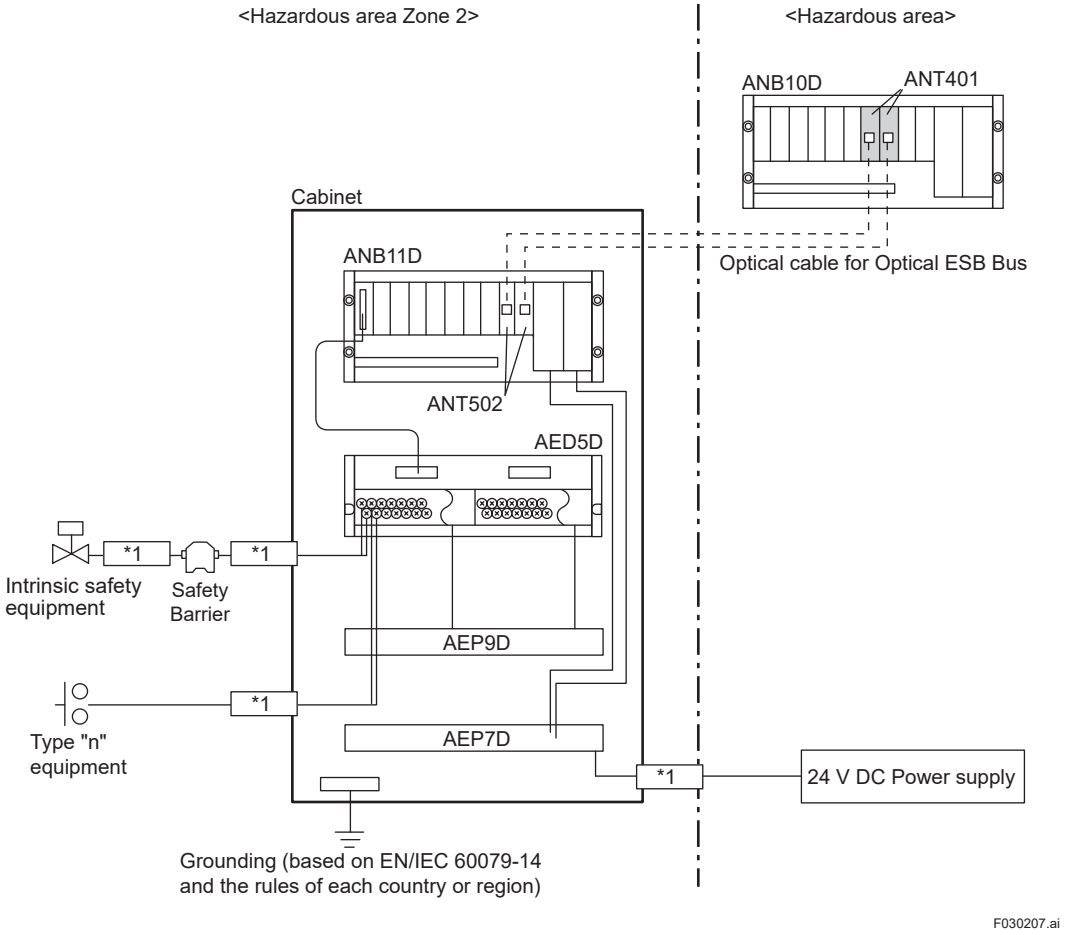

*1: Explosion-proof wiring that is defined in EN/IEC 60079-14 and the rules/standards of each country or region.

Figure Installing Optical ESB Bus Node Unit in Zone 2 (Wiring by Optical cable for Optical ESB Bus)

Installing a FCS or ESB Bus Node Unit in Zone 2

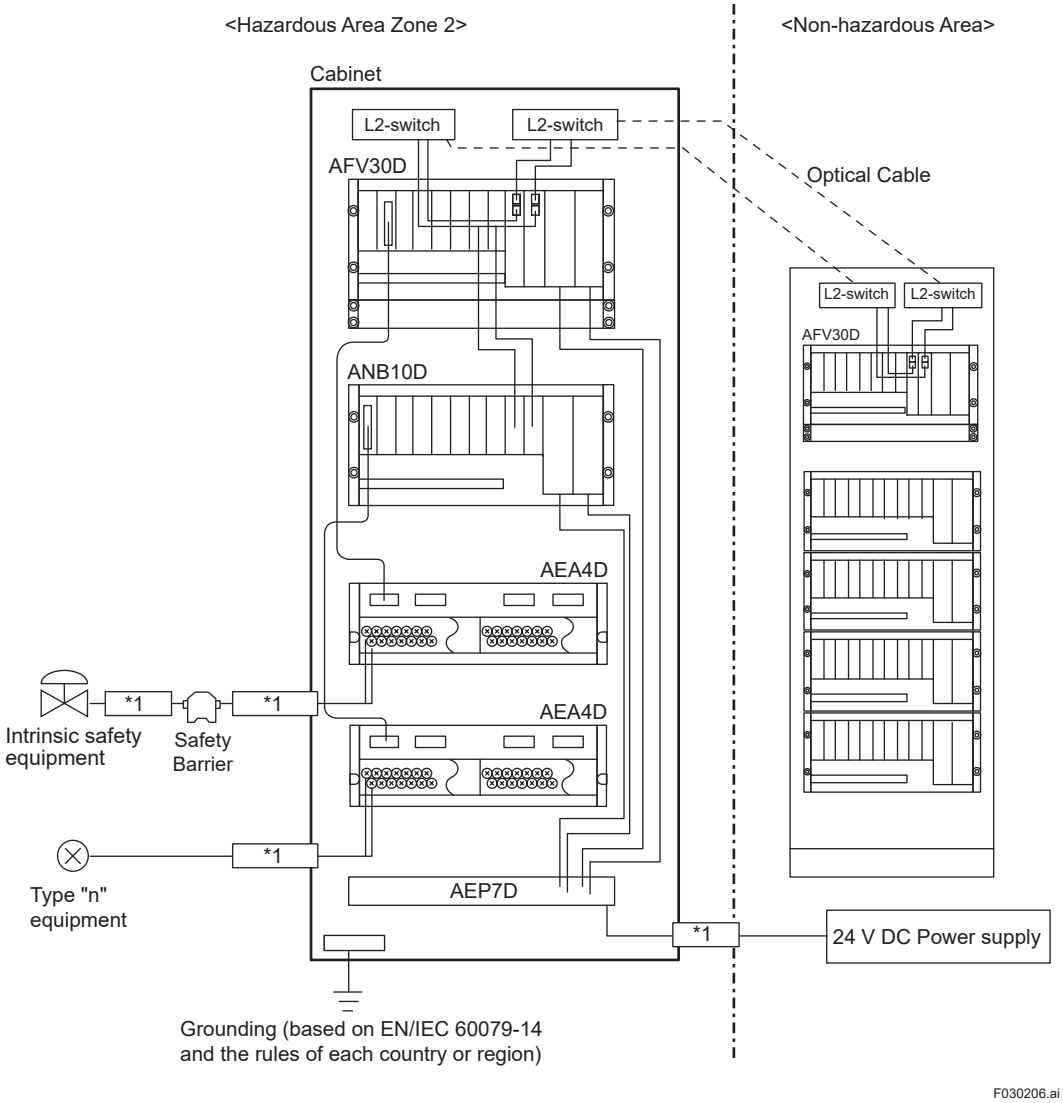

*1: Explosion-proof wiring that is defined in EN/IEC 60079-14 and the rules/standards of each country or region.

Figure Installing a FCS or ESB Bus Node Unit in Zone 2

4. Intrinsic Safety Explosion Protection Instrumentation

Intrinsic safety explosion protection is an electric circuit and a construction, which made so as not to ignite to gas by controlling the energy of electric circuit, if sparks, arc, and heat occur at the time of normal operating and an accident (short-circuit, earth fault, burnout). Intrinsic safety explosion protection equipments include intrinsic safety equipments and equipments related with intrinsic safety. Intrinsic safety equipments are able to be used in hazardous area. Equipments related with intrinsic safety are set up in non-hazardous area, and is connected with intrinsic safety equipment.

In CENTUM, intrinsic safety explosion protection instrumentation can be done by building Zener barrier or insulating barrier into it.

4.1 Intrinsic Safety Explosion Protection Instrumentation Using Barrier base plates

I.S. barriers comply with the I.S. explosion protection standard and can be mounted on the base plate (A2BN4D) (*1) which are connected to the I.S. equipment installed in the hazardous area with explosion-proof wiring. As for the intrinsic safety explosion protection instrumentation, refer to the instruction manual of the I.S. barriers of MTL products.

*1: Refer to “Base Plates (for N-IO)” (GS 33J62F40-01EN) for more details.

4.1.1 Intrinsic Safety Explosion Protection of ATEX Standard

A2BN5D base plate for barrier

A2BN5D base plate for barrier can be connected to the I.S. equipment installed in the hazardous area with explosion-proof wiring and can be installed in Zone 2 by mounting in a keyed metal cabinet with protection rating of IP54 or higher as shown in the following figures. Please refer to the instruction manual of P+F I.S. barriers for installation of I.S. barriers.

Explosion-proof Specifications and Complied Standard

[Explosion-proof specifications]
II 3(1) G Ex nA [ia Ga] IIC T4 Gc
II (1) D [Ex ia Da] III C
I (M1) [Ex ia Ma] I

[Complied standard]
EN 60079-0:2012+A11:2013
EN 60079-11:2012

Note: Regarding the latest conformity standard, refer to the GS 33J01A10-01EN “Integrated Production Control System CENTUM VP System Overview”.

Wiring of Intrinsic Safety Explosion Protection

An intrinsic safety circuit must be isolated from non-intrinsic safety circuit. Wiring should be prepared in accordance with EN 60079-14, or the standard of the country and the area in which it is set. In regards to the further wiring than the base plate for barrier (A2BN5D), take notice that it should be an intrinsic safety circuit. The wiring in cabinet should keep the distance to non-intrinsic safety circuit.

After setting, check the wiring according to the checklist described in EN 60079-17.

Parameter of Intrinsic Safety

Please refer to the P+F’s instruction manual of I.S. barriers installed in the base plate for barrier (A2BN5D) for the parameter of Intrinsic Safety.

4.1.2 Intrinsic Safety Explosion Protection of IEC Standard

A2BN5D base plate for barrier

A2BN5D base plate for barrier can be connected to the I.S. equipment installed in the hazardous area with explosion-proof wiring and can be installed in Zone 2 by mounting in a keyed metal cabinet with protection rating of IP54 or higher as shown in the following figures. Please refer to the instruction manual of P+F I.S. barriers for installation of I.S. barriers.

[Explosion-proof specifications]
Ex nA [ia Ga] IIC T4 Gc
[Ex ia Da] III C
[Ex ia Ma] I

[Complied standard]
IEC 60079-0:2011
IEC 60079-11:2011

Wiring of Intrinsic Safety Explosion Protection

An intrinsic safety circuit must be isolated from non-intrinsic safety circuit. Wiring should be prepared in accordance with IEC 60079-14, or the standard of the country and the area in which it is set. In regards to the further wiring than the base plate for barrier (A2BN5D), take notice that it should be an intrinsic safety circuit. The wiring in cabinet should keep the distance to non-intrinsic safety circuit.

After setting, check the wiring according to the checklist described in IEC 60079-17.

Parameter of Intrinsic Safety

Please refer to the P+F's instruction manual of I.S. barriers installed in the base plate for barrier (A2BN5D) for the parameter of Intrinsic Safety.

4.1.3 Intrinsic Safety Explosion Protection of FM Standard

A2BN5D base plate for barrier

A2BN5D base plate for barrier can be connected to the I.S. equipment installed in the hazardous area with explosion-proof wiring and can be installed in Division 2 by mounting in a keyed metal cabinet approved by approval authorities.

Please refer to the instruction manual of P+F I.S. barriers for installation of I.S. barriers.

Explosion-proof Specifications and Complied Standard

[Explosion-proof specifications]
Intrinsically Safe Associated Apparatus for Class I, II, III Division I Groups A, B, C, D, E, F and G
Intrinsically Safe Associated Apparatus Class I Zone 0, Group IIC, Temperature Class T4
Intrinsically Safe Associated Apparatus Zone 20, Group IIIC

[Complied standard]
Class 3600:2011
Class 3610:2010
ANSI/ISA-60079-0 (12.00.01)-2013
ANSI/ISA-60079-11 (12.02.01)-2014

Wiring of Intrinsic Safety Explosion Protection

An intrinsic safety circuit must be isolated from non-intrinsic safety circuit. Installation and wiring of Intrinsic Safety Explosion Protection shall be carried out in according with “Appendix3. FM NI/CSA NI Control Drawing for A2BN5D”.

Parameter of Intrinsic Safety

Please refer to the P+F’s instruction manual of I.S. barriers installed in A2BN5D for the parameter of Intrinsic Safety.

4.1.4 Intrinsic Safety Explosion Protection of CSA Standard

■ A2BN5D base plate for barrier

A2BN5D base plate for barrier can be connected to the I.S. equipment installed in the hazardous area with explosion-proof wiring and can be installed in Division 2 by mounting in a keyed metal cabinet approved by approval authorities.

Please refer to the instruction manual of P+F I.S. barriers for installation of I.S. barriers.

● Explosion-proof Specifications and Complied Standard

[Explosion-proof specifications]
Intrinsically Safe Associated Apparatus for Class I, II, III Division I Groups A, B, C, D, E, F and G
Intrinsically Safe Associated Apparatus Class I Zone 0, Group IIC
Intrinsically Safe Associated Apparatus Zone 20, Group IIIC

[Complied standard]
CAN/CSA-C22.2 No. 60079-0:11
CAN/CSA-C22.2 No. 60079-11:14

● Wiring of Intrinsic Safety Explosion Protection

An intrinsic safety circuit must be isolated from non-intrinsic safety circuit. Installation and wiring of Intrinsic Safety Explosion Protection shall be carried out in according with “Appendix3. FM NI/CSA NI Control Drawing for A2BN5D”.

● Parameter of Intrinsic Safety

Please refer to the P+F’s instruction manual of I.S. barriers installed in A2BN5D for the parameter of Intrinsic Safety.

4.2 Intrinsic Safety Explosion Protection Instrumentation Using Barriers

Category of Barriers

Classified roughly, barriers includes Zener barriers and insulating barriers (intrinsic safety barriers). Select the best one as your system, with the knowledge of their future.

(1) Feature of Zener barriers

Zener barrier has a simple construction which consists of just Zener Diode and resistance.

As the circuit of hazardous area and non-hazardous area are not insulated, they request the single point ground by the bus bar of Zener barriers, so as not to be created the functionally unfavorable ground loop by double point ground. Moreover, in most countries, it is impossible to ground circuits in hazardous area.

A power supply for barrier is not required, because Zener barriers carry out the function for security just with Zener Diode and resistance.

(2) Feature of insulating barriers

On the other hand, insulating barriers does not request intrinsic safety ground because the place between input and output of them is insulated. It is possible to ground circuits in hazardous area and use them (single point ground). However, a power supply for barrier is additionally required.

Considerations for Selection of Barrier

Here is a general explanation about the selection of barrier. On the occasion of implementing intrinsic safety Explosion Protection instrumentation, select a barrier according to the manufacture's specifications and estimates with the equipment.

(1) Approved standard

Make sure the barrier has the approved standard which is required for the installation site.

(2) Cost

Compared Zener barriers to insulating barriers about the general cost of the main unit only per a channel, the approximate proportion are 1 to 2. Also, insulating barriers request a power supply.

(3) Volume (dimensions)

Dimensions may influence the number of cabinet in which the barrier is set. Compared Zener barriers to insulating barriers about the size per a general channel, the approximate proportion are 1 to 2.

(4) Difficulty of wiring, necessity of insulating hazardous area circuit

Zener barriers always need intrinsic safety ground, and most model of them have the construction grounded through the bus bar. All the circuit on the same bus bar in hazardous area and non-hazardous area are grounded to the same electric potential. Moreover, in most countries, circuits in hazardous area need withstand voltage of 500 Vrms. Therefore, it is impossible to ground circuits in hazardous area and use them. Insulating barriers impose no restrictions like this, so it is possible to ground circuits in hazardous area and use them (single point ground). However, a power supply for barrier is additionally required.

(5) Failure rate

The construction of Zener barriers is simple, because they carry out the function for security just with Zener Diode and resistance. On the other hand, insulating barriers consist of various parts, because they have the function of insulation and energy restriction. Therefore, the failure rate of insulating barriers is generally higher than that of Zener barriers. In Zener barriers, problems are usually solved by replacement and, in insulating barriers by modification.

(6) Accuracy, response

In general, Zener barriers have advantages about accuracy and response, because insulating barriers usually have more complex signal path than Zener barriers.

(7) Withstand voltage

Withstand voltage is a rating which only insulating barriers have. Most of the models have 250 V or more AC/DC, so there's almost no problem at the time of instrumentation.

(8) Security rating

Security rating indicates the scale of energy that can be occurred in hazardous area of barrier in the case of the accident. It is usually described by the signage, such as Uo=n V, Io=n mA, Po=n W, Co=n μF, Lo=n mH (Um=n Vrms or DC: only insulating barriers).

(In FM standard, it is called entity parameter, including the parameter of (10), and is described such as Voc=n V, Isc=n mA, Ca=n μF, La=n mH).

(9) Permissible cable parameter

Permissible cable parameter indicates the scale (capacity, inductance) of hazardous area circuit (including cables) which can be connected to barriers. It is regulated by a barrier and a kind of gases. It is usually described by group (ex. IIC etc.=a kind of gases), n μF (capacity), n mH or n μH/Ω (inductance or L/R ratio).

(10) Voltage in non-hazardous area

In regards to Zener barriers, Vwkg (maximum working voltage) and Vmax (maximum permissible voltage) are regulated. In regards to insulating barriers, regulation of voltage is for power supply rating only, but the use conditions of circuit in non-hazardous area are different by models.

(11) Influence by resistance value between input and output

This is a matter of only Zener barriers. As resistance and fuse exist between terminals of input and output in a barrier, in regards to an application that pass an electric current, it is necessary to take account of voltage drop inside the barrier. Moreover, in some application, it is necessary to take account of Diode current leakage (usually several μA).

Wiring of Intrinsic Safety Explosion Protection

An intrinsic safety circuit must be isolated from non-intrinsic safety circuit.

Wiring should be prepared in accordance with IEC 60079-14, NEC (National Electrical Code : NFPA-70), or the standard of the country and the area in which it is set. The wiring in cabinet should keep the distance to non-intrinsic safety circuit.

After setting, check the wiring according to the checklist described in IEC 60079-17.

An intrinsic safety circuit of barrier is indicated by the following ratings.

Maximum voltage of intrinsic safety circuit	Uo
Maximum current of intrinsic safety circuit	Io
Maximum electricity of intrinsic safety circuit	Po
Permissible inductance of intrinsic safety circuit	Lo
Permissible capacitance of intrinsic safety circuit	Co

As a combination of intrinsic safety circuits connected with barriers and wiring, it is necessary to meet the following conditions to keep the intrinsic safety performance.

Uo	≤	Ui
Io	≤	Ii
Po	≤	Pi
Lo	≥	Li+Lw
Co	≥	Ci+Cw

Intrinsic safety circuit should consist of barriers to meet these conditions of permissible voltage, current, and electricity, and should be wired so that inductance and capacitance of its wiring doesn't exceed its permissible value.

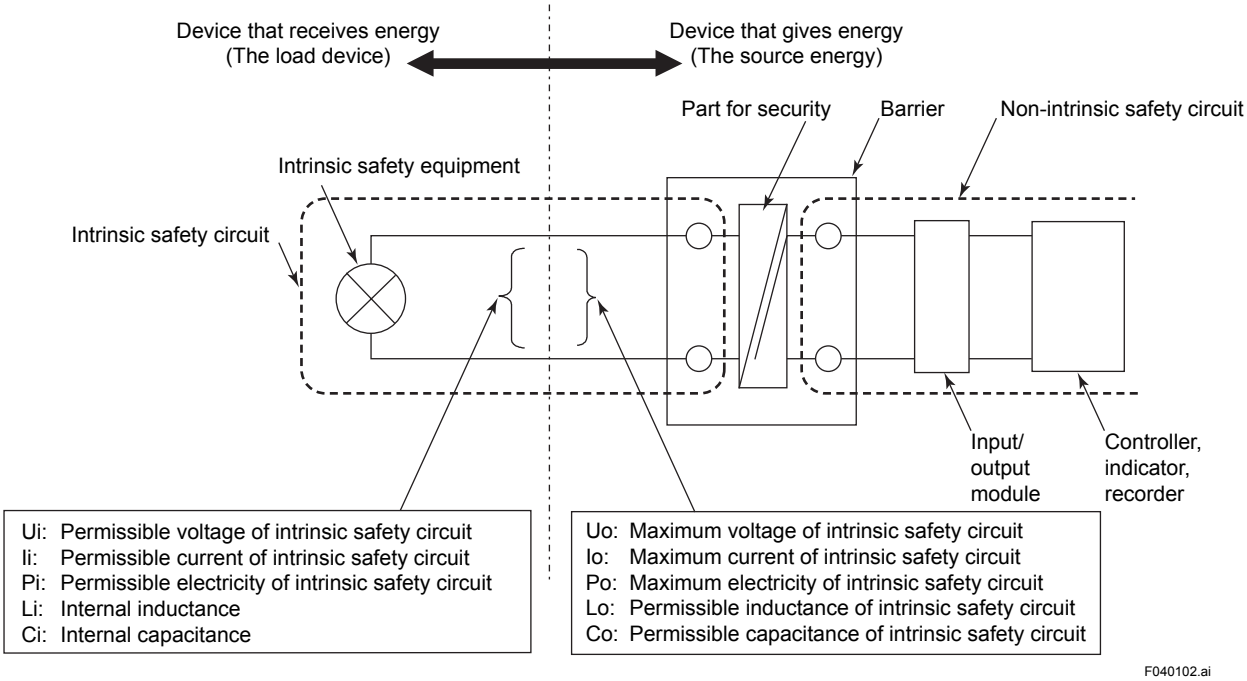

Figure Composition Used in a Barrier

Considerations for Zener Barriers in Use

Check the specifications of barrier, before you use it.

Considerations for Input Channel of Current

Note that the current value may have errors in a combination of FIO and Zener barrier.

In the system illustrated in the following figure, when the input module applies electric power to the transmitter, the input current value may have errors.

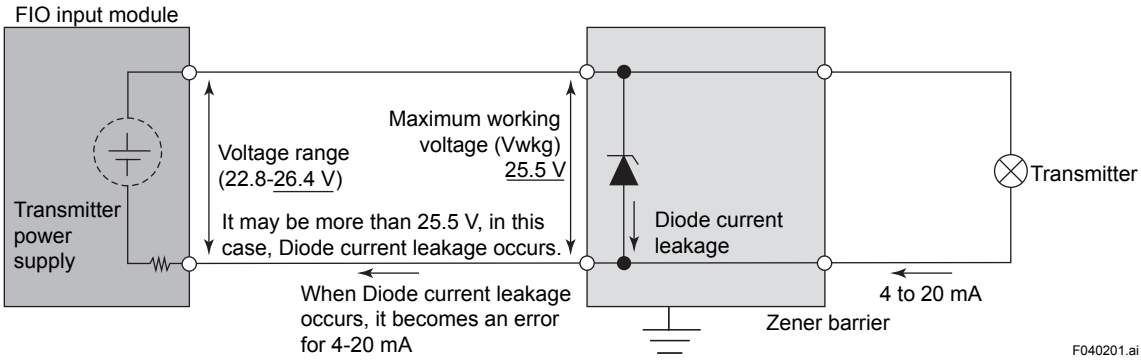

Figure Considerations for Current Input Channel

In FIO of CENTUM, when the input module applies electric power to the transmitter, applying voltage of 24 V may produce more than voltage of 25.5 V. In Zener barrier, if the voltage of more than 25.5 V is applied, the current runs on Diode, so that the excess of current doesn't apply. In this case, the quantity of current that passes on Diode for 4-20 mA signal from transmitter is added to the current applied to FIO input module, an error in a measurement are produced.

Note: In AAI143, although supply voltage is limited 25.5 V, Zener barrier cannot be connected because of the problem about wiring channel.

Considerations for Current Output Module

The current output module adjusts voltage so that it generates an appropriate value of current, and outputs it. The output module checks if the value of output current and that of actual current are the same. The current of 0 is considered as OOP. If the value of actual current is lower than that of output current, Readback error occurs, which is considered as a hardware mdule failure.

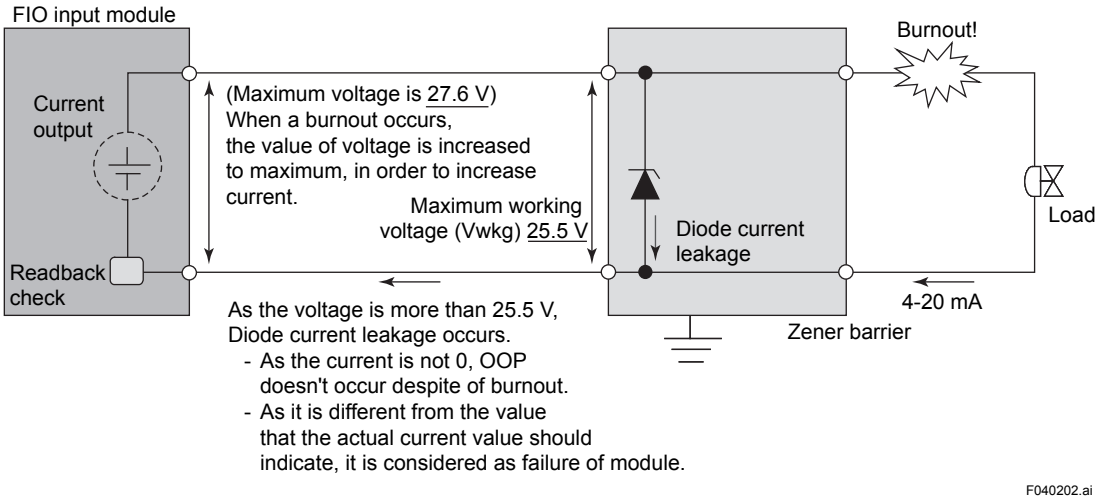

Figure Considerations for Output Module of Current

The voltage of more than 25.5 V produces Diode current leakage, so that the value of current never becomes 0 in Readback check, despite of burnout. Therefore, the check of OOP is not available. The value of current is considered as failure of module, because it is different from the value of output current.

Example of Connection at the Barrier in Use (Connection Using Marshalling Panel)

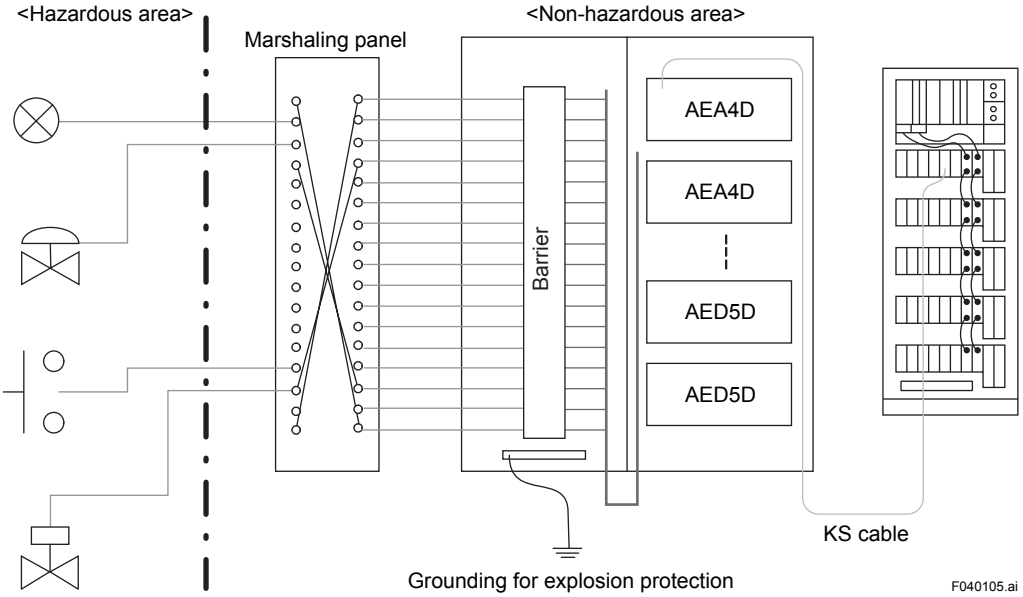

Figure Example of Connection at the Barrier in Use (Connection Using Marshaling Panel)

- The barrier should be connected with field equipment in accordance with the electric parameter of each equipment.
- Creepage distance between intrinsic safety circuit and non-intrinsic safety circuit should be kept 50 mm or more.
- Wiring should be prepared in accordance with IEC 60079-14, NEC (National Electrical Code : ANSI/NFPA-70), CEC (Canadian Electrical Code), or the wiring for explosion protection that each country regulates.

Appendix 1. Lists of NI Compliant Products and NI Parameters

Note: Regarding the latest conformity standard, refer to the GS 33J01A10-01EN “Integrated Production Control System CENTUM VP System Overview”.

Appendix 1.1 Lists of CSA NI Compliant Products and CSA NI Parameters

■ The List of CSA NI Compliant Products

Table The List of CSA NI Compliant Products <for FIO/N-IO> (1/4)

Classifications	Type names	Products
Node unit	ANB10S-□1E ANB10S-□1F ANB10S-□1G	Node Unit for Single ESB Bus (100 V AC power supply)
	ANB10S-□4E ANB10S-□4F ANB10S-□4G	Node Unit for Single ESB Bus (24 V DC power supply)
	ANB10D-41E ANB10D-41F ANB10D-41G	Node Unit for Dual-Redundant ESB Bus (100 V AC power supply duplication)
	ANB10D-44E ANB10D-44F ANB10D-44G	Node Unit for Dual-Redundant ESB Bus (24 V DC power supply duplication)
	ANB11S-□1E ANB11S-□1F	Node Unit for Single ESB Bus with Optical Repeater (100 V AC power supply)
	ANB11S-□4E ANB11S-□4F	Node Unit for Single ESB Bus with Optical Repeater (24 V DC power supply)
	ANB11D-□1E ANB11D-□1F	Node Unit for Dual-Redundant ESB Bus with Optical Repeater (100 V AC power supply duplication)
	ANB11D-□4E ANB11D-□4F	Node Unit for Dual-Redundant ESB Bus with Optical Repeater (24 V DC power supply duplication)
	A2NN30D-□3□□□□□1□ A2NN30D-□4□□□□□1□	Node Interface Unit
	A2BN3D-□□1□□	Base Plate for Adaptor
	A2BN4D-2□1□□	Base Plate for Barrier
	A2BN5D-2□1□□	Base Plate for Barrier
N-IO field enclosure	A2NN70D- □□Q□□B□1□□□□□□□□ A2NN70D- □□Q□□D□1□□□□□□□□	N-IO field enclosure
	A2NN60D-□□Q□□1□□□□	N-IO field enclosure base unit
	A2CB60-B□1□□□□□□□□ A2CB60-D□1□□□□□□□□	Enclosure for A2NN60D
	A2CX100 (*1)	Sealing module set for N-IO field enclosure
Unit	ANT10U-□1E ANT10U-□1F	Unit for Optical ESB Bus Repeater Module (100 V AC power supply)
	ANT10U-□4E ANT10U-□4F	Unit for Optical ESB Bus Repeater Module (24 V DC power supply)

Note: Any accessories for maintenance are CSA NI approved products.
*1: A2CX100 used in the N-IO field enclosure comply with CSA NI.

Table The List of CSA NI Compliant Products <for FIO/N-IO> (2/4)

Classifications	Type names	Products
Power supply module	PW481-E□	100 V AC power supply module
	PW484-E□	24 V DC power supply module
	A2PW503-S□1□□	24 V DC power supply unit
	A2PW504-S□1□□	24 V DC power supply unit
Bus interface module	SB401-E□	ESB Bus Interface Slave Module
	ANT502-E□	Optical ESB Bus Repeater Slave Module
	ANT512-E□	Optical ESB Bus Repeater Slave Module
	ANT522-E□	Optical ESB Bus Repeater Slave Module (for Multimode Fiber)
	A2EN501- S□□1□□	N-ESB Bus Module
I/O module	AAI141-□E□	Analog input module (4 to 20 mA, 16 points, non-insulation)
	AAV141-SE□	Analog input module (1 to 5 V, 16 points, non-insulation)
	AAV142-SE□	Analog input module (-10 to +10 V, 16 points, non-insulation)
	AAB141-HE□	Analog input module (1 to 5 V/4 to 20 mA, 16-channel, non-isolated)
	AAI841-□E□	Analog I/O module (4 to 20 mA, 8 input points/8 output points, non-insulation)
	AAB841-SE□	Analog I/O module (1 to 5 V output 4 to 20 mA, 8 input points/8 output points, non-insulation)
	AAB842-HE□	Analog I/O module (1 to 5 V / 4 to 20 mA input, 4 to 20 mA output, 8-channel input/ 8-channel output, non-isolated)
	AAV542-SE□	Analog output module (-10 to +10 V, 16 points, non-insulation)
	AAI143-□E□	Analog input module (4 to 20 mA, 16 points, whole insulation)
	AAI543-□E□ AAI543-□F□	Analog output module (4 to 20 mA, 16 points, whole insulation)
	AAV144-SE□	Analog input module (-10 to +10 V, 16 points, whole insulation)
	AAV544-SE□	Analog output module (-10 to +10 V, 16 points, whole insulation)
	AAT141-SE□	Thermocouple/mV input module (16 points, whole insulation)
	AAR181-SE□	RTD input module (12 points, whole insulation)
	AAI135-□E□	Analog input module (4 to 20 mA, 8 points, individual insulation)
	AAI835-□E□	Analog I/O module (4 to 20 mA, 4 points input /4 points output, individual insulation)
	AAP135-SE□	Pulse input module (0 to 10 kHz, 8 points, individual insulation)
	AAT145-SE□	Thermocouple/mV input module (16 points, individual insulation)
	AAR145-SE□	RTD/slide rheostat input module (16 points, individual insulation)
	ADV151-PE□ ADV151-PF□	Digital input module (32 points, pulse-count function)
	ADV551-PE□ ADV551-PF□ (*2)	Digital output module (32 points, pulse with output function)
	ADV141-PE□	Digital input module (16 points, 100 V AC, pulse-count function)
	ADV157-SE□	Digital input module (32 points, for press-tightening terminal only)
	ADV557-SE□	Digital output module (32 points, for press-tightening terminal only)
	ADV161-PE□	Digital input module (64 points, pulse-count function)
	ADV561-PE□ (*2)	Digital output module (64 points, pulse-count function)
	ALF111-SE□	Fieldbus (FF-H1) communication module
	A2MMM843-SS□1□□	Analog Digital I/O Module (16-channel, Isolated)
	A2MDV843-0S□1□□	Digital I/O Module (16-channel, Isolated)

Note: Any accessories for maintenance are CSA NI approved products.
*2: For the combination of ADV551 and AED5D or A1BD5D, or ADV561 and AED5D or A1BD5D in voltage output mode (means powering a external load from AED5D or A1BD5D), the CSA NI field wiring cannot be made.

Table The List of CSA NI Compliant Products <for FIO/N-IO> (3/4)

Classifications	Type names	Products
I/O Adaptor	A2SMX801-S1□□	Pass-through I/O Signal Adaptor (Pass-through I/O Signal)
	A2SMX802-S1□□	Pass-through I/O Signal Adaptor (with field power output)
	A2SAM105-H1□□	Current Input/Voltage Input Adaptor
	A2SAM505-H1□□	Current Output/Voltage Output Adaptor
	A2SAP105-S1□□	Pulse Input Signal Adaptor (0 to 10 kHz)
	A2SAT105-S1□□	mV/TC/RTD Input Adaptor
	A2SDV105-S1□□	Digital Input Adaptor (24 V DC Voltage Input, Dry Contact Input)
	A2SDV505-S1□□	Digital Output Adaptor (24 V DC, Current Source: 0.5 A)
	A2SDV506-S1□□	Relay Output Adaptor (24 V DC, Dry Contact Output: 0.5 A)
Terminal block	ATA4D	Duplicated press-tightening terminal block for analog
	ATT4D	Duplicated press-tightening terminal block for thermocouple/mV
	ATR8D	Duplicated press-tightening terminal block for RTD
	ATB5D	Duplicated press-tightening terminal block for digital input
	ATD5D	Duplicated press-tightening terminal block for digital output
	ATI3D	Duplicated press-tightening terminal block for analog individual insulation
	ATA4S	Single press-tightening terminal block for analog
	ATT4S	Single press-tightening terminal block for thermocouple/mV
	ATR8S	Single press-tightening terminal block for digital RTD
	ATB5S	Single press-tightening terminal block for digital input
	ATD5S	Single press-tightening terminal block for digital output
	ATI3S	Single press-tightening terminal block for analog individual insulation
	ATC4S-5□	Press-tightening terminal block for digital (for 100 V AC input)
	ATC5S	Press-tightening terminal block for digital (for ADV157, ADV557)
	ATF9S	Press-tightening terminal block for fieldbus
	ATK4A	KS cable interface adapter (for analog)
	ATM4A	KS cable interface adapter (for MAC2 compatible)
	ATV4A	KS cable interface adapter (for VM2 compatible)
	ATI3A	KS cable interface adapter (for AAI135, AAP135)
	ATB3A	KS cable interface adapter (for AAI835)
	ATD5A	KS cable interface adapter (for digital)
Terminal board	AEA3D-0E AEA3D-0F	Analog/single, Duplicated terminal board (8 points x 4)
	AEA4D-0E AEA4D-0F	Analog/single, Duplicated terminal board (16 points x 2 or 8 points x 2)
	A1BA4D-0E A1BA4D-0F	Terminal Board for Analog (16 points x 1 or 8 points x 1)
	AET4D-0E AET4D-0F	Thermocouple/single, Duplicated terminal board (16 points x 2)
	A1BT4D-0E A1BT4D-0F	Terminal Board for Thermocouple (16 points x 1)
	AER4D-0E AER4D-0F	RTD/ slide rheostat single, duplicated terminal board (16 points)
	A1BR4D-0E A1BR4D-0F	Terminal Board for RTD input (16 points x 1)
	AED5D-0E AED5D-0F (*2)	Digital/single, duplicated terminal board (32 points x 2)
	A1BD5D-0E A1BD5D-0F (*2)	Terminal Board for Digital (32 points x 1)
	AEC4D-5E AEC4D-5F	Digital/single, duplicated terminal board (for 100 V AC input)

Note: Any accessories for maintenance are CSA NI approved products.
*2: For the combination of ADV551 and AED5D or A1BD5D, or ADV561 and AED5D or A1BD5D in voltage output mode (means powering a external load from AED5D or A1BD5D), the CSA NI field wiring cannot be made.

Table The List of CSA NI Compliant Products <for FIO/N-IO> (4/4)

Classifications	Type names	Products
Terminal board	AEF9D-0E AEF9D-0F	Fieldbus/single, duplicated terminal board
	MRT	Terminal board for RTD
	A2BM4-1□0	Terminal board for analog digital I/O
Bus cable	YCB301	ESB Bus Cable
	YCB141	ER bus cable
Signal cable (*3)	AKB331	Signal cable (ADV151, between ADV551 and terminal board), (between A2BN3D and terminal board)
	AKB332	Signal cable (between ADV141 and terminal board)
	AKB335	Signal cable (between AAR145 and AER4D)
	AKB336	Signal cable (between ALF111 and terminal board)
	AKB337	Signal cable (ADV161, between ADV561 and terminal board)
	AKB651	Signal cable (between A2BN3D and terminal board)
	KS1	Signal cable (40 - 40 pin)
	KS8	Signal cable (50 - 50 pin)
I/O module	ANT401-E□	Optical ESB Bus Repeater Master Module
	ANT411-E□	Optical ESB Bus Repeater Master Module
	ANT421-E□	Optical ESB Bus Repeater Master Module (for Multimode Fiber)
Distribution unit	AEP7D-1E AEP7D-1F	Primary distribution unit (for 100 V AC input)
	AEP7D-4E AEP7D-4F	Primary distribution unit (for 24 V DC input)
	AEPV7D-1□E AEPV7D-1□F	Power Supply Bus Unit, Vertical Type
	AEPV7D-4□E AEPV7D-4□F	Power Supply Bus Unit, Vertical Type
	AEP9D-4E AEP9D-4F	Secondary distribution unit

Note: Any accessories for maintenance are CSA NI approved products.
*3: For CSA Non-Incendive instrumentation, specify the option code “/NL”.

Parameters of CSA NI Compliant Equipments

FIO

The appropriate I/O modules and parameters are as follows.
The appropriate equipments are source devices.

Table FIO Parameters (The Source Devices) (1/2)

Module name		Voc (V)	Isc (mA)	Ca (μF)	La (mH)	Vn (V)	In (mA)	Cn (μF)	Ln (mH)	Remarks (*1)
SB401-E□	Dual	—	—	—	—	—	—	—	—	(*2)
	Single	—	—	—	—	—	—	—	—	(*2)
ANT502-E□	Dual	—	—	—	—	—	—	—	—	(*2)
	Single	—	—	—	—	—	—	—	—	(*2)
ANT512-E□	Dual	—	—	—	—	—	—	—	—	(*2)
	Single	—	—	—	—	—	—	—	—	(*2)
ANT522-E□	Dual	—	—	—	—	—	—	—	—	(*2)
	Single	—	—	—	—	—	—	—	—	(*2)
AAI141-□E□	Dual	27.6	54.0	0.12	2.7	27.6	24.0	0.12	100.0	If two-wired type is set
	Single	27.6	27.0	0.19	2.7	27.6	24.0	0.19	100.0	If two-wired type is set
AAI143-□E□	Dual	25.5	26.3	0.22	21.9	25.5	23.0	0.22	100.0	If two-wired type is set
	Single	25.5	26.3	0.22	21.9	25.5	23.0	0.22	100.0	If two-wired type is set
AAI841-□E□ Input	Dual	27.6	54.0	0.12	2.7	27.6	24.0	0.12	100.0	If two-wired type is set
	Single	27.6	27.0	0.19	2.7	27.6	24.0	0.19	100.0	If two-wired type is set
AAI841-□E□ Output	Dual	27.6	23.0	0.12	19.0	27.6	23.0	0.12	100.0	
	Single	27.6	23.0	0.19	19.0	27.6	23.0	0.19	100.0	
AAB841-SE□ Output	Dual	27.6	23.0	0.12	19.0	27.6	23.0	0.12	100.0	
	Single	27.6	23.0	0.19	19.0	27.6	23.0	0.19	100.0	
AAI543-□E□ AAI543-□F□	Dual	24.3	23.0	0.33	21.9	24.3	23.0	0.33	100.0	
	Single	24.3	23.0	0.33	21.9	24.3	23.0	0.33	100.0	
AAI835-□E□ **[Style S1, S2]** Input	Dual	31.0	31.0	0.25	15.4	31.0	24.0	0.25	100.0	If two-wired transmitter is set
	Single	31.0	31.0	0.12	15.4	31.0	24.0	0.12	100.0	If two-wired transmitter is set
AAI835-□E□ **[Style S1, S2]** Output	Dual	31.0	23.0	0.15	40.0	31.0	23.0	0.15	100.0	
	Single	31.0	23.0	0.12	40.0	31.0	23.0	0.12	100.0	
AAI835-□E□ **[Style S3]** Input	Dual	26.0	31.0	0.25	15.4	26.0	24.0	0.25	100.0	If two-wired transmitter is set
	Single	26.0	31.0	0.12	15.4	26.0	24.0	0.12	100.0	If two-wired transmitter is set
AAI835-□E□ **[Style S3]** Output	Dual	29.3	23.0	0.15	40.0	29.3	23.0	0.15	100.0	
	Single	29.3	23.0	0.12	40.0	29.3	23.0	0.12	100.0	
AAI135-□E□ **[Style S1, S2]**	Dual	31.0	31.0	0.25	15.4	31.0	24.0	0.25	100.0	If two-wired transmitter is set
	Single	31.0	31.0	0.12	15.4	31.0	24.0	0.12	100.0	If two-wired transmitter is set
AAI135-□E□ **[Style S3]**	Dual	26.0	31.0	0.25	15.4	26.0	24.0	0.25	100.0	If two-wired transmitter is set
	Single	26.0	31.0	0.12	15.4	26.0	24.0	0.12	100.0	If two-wired transmitter is set
AAP135-SE□		—	—	—	—	—	—	—	—	Non-compliant (*2)
AAV542-SE□	Dual	11.0	11.7	0.27	20.0	11.0	11.7	0.27	100.0	
	Single	11.0	11.7	0.4	20.0	11.0	11.7	0.4	100.0	

*1: Without any mode name in the appropriate remarks column, these parameters are valid for any operation mode of the module (type name).
*2: All wiring shall comply with Canadian Electrical Code Part I and Local Electrical Codes.

Table FIO Parameters (The Source Devices) (2/2)

Module name		Voc (V)	Isc (mA)	Ca (μF)	La (mH)	Vn (V)	In (mA)	Cn (μF)	Ln (mH)	Remarks (*1)
AAV544-SE□	Dual	11.8	12.5	0.27	20.0	11.8	12.5	0.27	100.0	
	Single	11.8	12.5	0.4	20.0	11.8	12.5	0.4	100.0	
AAR181-SE□	Dual	5.25	1.0	1.0	20.0	5.25	1.0	5.0	100.0	
	Single	5.25	1.0	1.0	20.0	5.25	1.0	5.0	100.0	
AAT145-SE□	Dual	5.0	0.5	1.0	20.0	1.25	0.125	1.0	100.0	RJC input
	Single	5.0	0.5	1.0	20.0	1.25	0.125	1.0	100.0	RJC input
AAT145-SE□	Dual	16.5	33.4	0.3	0.8	16.5	5.0	0.3	0.8	Power supply for RJC
	Single	16.5	16.7	0.3	0.8	16.5	5.0	0.3	0.8	Power supply for RJC
AAT145-SE□	Dual	16.5	33.0	0.3	0.8	16.5	4.4	0.3	0.8	Detection of unplugged cable
	Single	16.5	16.5	0.3	0.8	16.5	2.2	0.3	0.8	Detection of unplugged cable
AAR145-SE□	Dual	5.0	1.1	1.0	20.0	5.0	1.1	1.0	100.0	RTD/POT input
	Single	5.0	1.1	1.0	20.0	5.0	1.1	1.0	100.0	RTD/POT input
AAR145-SE□	Dual	26.4	52.8	0.3	0.8	26.4	4.0	0.3	0.8	Detection of unplugged cable
	Single	26.4	26.4	0.3	0.8	26.4	2.0	0.3	0.8	Detection of unplugged cable
AAB842-HE□ Output	Dual	27.6	23.0	0.12	19.0	27.6	23.0	0.12	100.0	
	Single	27.6	23.0	0.19	19.0	27.6	23.0	0.19	100.0	
ADV151-PE□ ADV151-PF□	Dual	—	—	—	—	—	—	—	—	Contact input mode (*2)
	Single	—	—	—	—	—	—	—	—	
ADV161-PE□	Dual	—	—	—	—	—	—	—	—	Contact input mode (*2)
	Single	—	—	—	—	—	—	—	—	
ADV551-PE□ ADV551-PF□	Dual	NI field wiring cannot be made (because the combination of this module and terminal boards cannot create current limit during supplying energy for NI equipment external wiring).								Voltage output mode (*2)
	Single									
ADV561-PE□	Dual	NI field wiring cannot be made (because the combination of this module and terminal boards cannot create current limit during supplying energy for NI equipment external wiring).								Voltage output mode (*2)
	Single									
ANT401-E□	Dual	—	—	—	—	—	—	—	—	(*2)
	Single	—	—	—	—	—	—	—	—	(*2)
ANT411-E□	Dual	—	—	—	—	—	—	—	—	(*2)
	Single	—	—	—	—	—	—	—	—	(*2)
ANT421-E□	Dual	—	—	—	—	—	—	—	—	(*2)
	Single	—	—	—	—	—	—	—	—	(*2)
AEPV7D-1□E AEPV7D-1□F	CN1 to CN7	—	—	—	—	—	—	—	—	
AEPV7D-4□E AEPV7D-4□F	CN1 to CN7	—	—	—	—	—	—	—	—	

*1: Without any mode name in the appropriate remarks column, these parameters are valid for any operation mode of the module (type name).
*2: All wiring shall comply with Canadian Electrical Code Part I and Local Electrical Codes.

The appropriate products are load devices which received energy from CSA NI equipments.

Table FIO Parameters (The Load Devices) (1/2)

Module name		Vmax (V)	Imax (mA)	Ci (μF)	Li (μH)	Remarks (*1) (mode, terminals)
SB401-E□	Dual	—	—	—	—	(*2)
	Single	—	—	—	—	(*2)
ANT502-E□	Dual	—	—	—	—	(*2)
	Single	—	—	—	—	(*2)
ANT512-E□	Dual	—	—	—	—	(*2)
	Single	—	—	—	—	(*2)
ANT522-E□	Dual	—	—	—	—	(*2)
	Single	—	—	—	—	(*2)
AAI141-□E□	Dual	20.0	60.0	4200 pF	3.6	If four-wired type is set
	Single	12.0	30.0	3100 pF	4.8	If four-wired type is set
AAI143-□E□	Dual	25.5	26.3	7000 pF	10.0	If four-wired type is set
	Single	25.5	26.3	3500 pF	10.0	If four-wired type is set
AAI841-□E□ Input	Dual	20.0	60.0	4200 pF	3.6	If four-wired type is set
	Single	12.0	30.0	3100 pF	4.8	If four-wired type is set
AAI835-□E□ Input	Dual	8.2	31.0	8600 pF	2.0	If four-wired transmitter is connected
	Single	8.2	31.0	5300 pF	4.0	If four-wired transmitter is connected
AAI135-□E□	Dual	8.2	31.0	8600 pF	2.0	If four-wired transmitter is connected
	Single	8.2	31.0	5300 pF	4.0	If four-wired transmitter is connected
AAP135-SE□	Dual	26.4	30	5000 pF	10	
	Single	26.4	30	5000 pF	10	
AAV142-SE□	Dual	13.0	26.0 μA	0.057	0.438	
	Single	13.0	13.0 μA	0.03	0.880	
AAV141-SE□	Dual	7.5	15.0 μA	0.146	2.4	
	Single	7.5	7.5 μA	0.074	4.8	
AAV144-SE□	Dual	30.0	0.28	0.001	10.0	
	Single	30.0	0.14	0.001	10.0	
AAB841-SE□ Input	Dual	7.5	15.0 μA	0.146	2.4	
	Single	7.5	7.5 μA	0.074	4.8	
AAT141-SE□	Dual	0.18	0.5	2.43	2.1	
	Single	0.18	0.25	2.43	2.1	
AAB141-HE□	Dual	24.0	26.3	0.146	2.4	Current input
	Single	24.0	26.3	0.074	4.8	Current input
AAB141-HE□	Dual	7.5	15.0 μA	0.146	2.4	Voltage input
	Single	7.5	7.5 μA	0.074	4.8	Voltage input
AAB842-HE□ Input	Dual	24.0	26.3	0.146	2.4	Current input
	Single	24.0	26.3	0.074	4.8	Current input
AAB842-HE□ Input	Dual	7.5	15.0 μA	0.146	2.4	Voltage input
	Single	7.5	7.5 μA	0.074	4.8	Voltage input
ADV157-SE□	Single	30.0	5.5	0.11	0	
ADV151-PE□ ADV151-PF□	Dual	30.0	11.0	0.001	10.0	
	Single	30.0	5.5	0.001	10.0	
ADV161-PE□	Dual	30.0	6.7	0.001	10.0	
	Single	30.0	3.4	0.001	10.0	
ADV141-PE□	—	—	—	—	—	Non-compliant (*2)
ADV557-SE□	Single	26.4	100.0	0.138	0	
ADV551-PE□ ADV551-PF□	Dual	26.4	100.0	0.28	10.0	Without surge absorber Contact output mode
	Single	26.4	100.0	0.14	10.0	Contact output mode

*1: Without any mode name in the appropriate remarks column, All parameters are valid for any operation mode of the module (type name).
*2: All wiring shall comply with Canadian Electrical Code Part I and Local Electrical Codes.

Table FIO Parameters (The Load Devices) (2/2)

Module name		Vmax (V)	Imax (mA)	Ci (μF)	Li (μH)	Remarks (*1) (mode, terminals)
ADV561-PE□	Dual	26.4	100.0	0.275	0	Contact output mode
	Single	26.4	100.0	0.138	0	Contact output mode
AAT145-SE□	Dual	5.0	1.0	0.0015	12.6	TC/mV input
	Single	5.0	1.0	0.0010	12.6	TC/mV input
ALF111-SE□	Dual	-	-	-	-	(*3)
	Single	-	-	-	-	(*3)
ANT401-E□	Dual	—	—	—	—	(*2)
	Single	—	—	—	—	(*2)
ANT411-E□	Dual	—	—	—	—	(*2)
	Single	—	—	—	—	(*2)
ANT421-E□	Dual	—	—	—	—	(*2)
	Single	—	—	—	—	(*2)
AEPV7D-1□E AEPV7D-1□F	CN1 to CN7	—	—	—	—	
AEPV7D-4□E AEPV7D-4□F	CN1 to CN7	—	—	—	—	
A1BD5D-□E A1BD5D-□F	TM3	—	—	—	—	Ready input (*2)
		60	20	0	0	Ready input DC

*1: Without any mode name in the appropriate remarks column, All parameters are valid for any operation mode of the module (type name).
*2: All wiring shall comply with Canadian Electrical Code Part I and Local Electrical Codes.
*3: Use a barrier for fieldbus as field wiring terminal for CSA NI (example: KLD2-PR-Ex1.IEC1).

Table Cable Parameter

Model	Lc (μH/m)	Cc (pF/m)
YCB141	0.25	100
YCB301 (*1)	—	—
KS1	1.50	110
KS2	1.50	110
KS8	1.50	110
KS9	1.50	110
AKB331	1.50	110
AKB332	2.20	100
AKB335	1.50	110
AKB336 (*1)	—	—
AKB337	1.50	110

*1: All wiring shall comply with Canadian Electrical Code Part I and Local Electrical Codes.

N-IO

Refer to Appendix 2 for the parameter of A2MMM843, A2MDV843, A2SAM105, A2SAM505, A2SAP105, A2SAT105, A2SDV105, A2SDV506, A2NN70D, and A2NN60D.

Table Cable Parameter

Model	Lc (μH/m)	Cc (pF/m)
AKB331	1.50	110
AKB651 (*1)	—	—

*1: All wiring shall comply with Canadian Electrical Code Part I and Local Electrical Codes.

Appendix 1.2 Lists of FM NI Compliant Products and FM NI Parameters

■ The List of FM NI Compliant Products

Table The List of FM NI Compliant Products (1/4)

Classifications	Type names	Products
Field control unit	AFV10S-S□1□E1 AFV10S-S□1□F1 (*1)	Field Control Unit
	AFV10D-S41□E1 AFV10D-S41□F1 (*1)	Duplexed Field Control Unit
	AFV30S-□□1□E□ AFV30S-□□1□F□ (*1)	Field Control Unit
	AFV30D-□41□E□ AFV30D-□41□F□ (*1)	Duplexed Field Control Unit
	A2FV50S-□□□11□□ A2FV50S-□□□21□□ A2FV50S-□□□41□□ (*1)	Field control unit
	A2FV50D-□□□11□□ A2FV50D-□□□21□□ A2FV50D-□□□41□□ (*1)	Duplexed Field Control Unit
Node unit	ANB10S-□□E ANB10S-□□F ANB10S-□□G	Node Unit for Single ESB Bus
	ANB10D-4□E ANB10D-4□F ANB10D-4□G	Node Unit for Dual-Redundant ESB Bus
	ANB11S-□□E ANB11S-□□F	Node Unit for Single ESB Bus with Optical Repeater
	ANB11D-□□E ANB11D-□□F	Node Unit for Dual-Redundant ESB Bus with Optical Repeater
	ANR10S-□□E ANR10S-□□F	Node Unit for Single ER Bus
	ANR10D-4□E ANR10D-4□F	Node Unit for Dual-Redundant ER Bus
	ANR11S-□□E ANR11S-□□F	Node Unit for Single ER Bus
	ANR11D-4□E ANR11D-4□F	Node Unit for Dual-Redundant ER Bus
	A2NN30D-□3□□□□□1□ A2NN30D-□4□□□□□1□	Node Interface Unit
	A2BN3D-□□1□□	Base Plate for Adaptor
	A2BN4D-2□1□□	Base Plate for Barrier
	A2BN5D-2□1□□	Base Plate for Barrier
N-IO field enclosure	A2NN70D- □□Q□□B□1□□□□□□□□□ A2NN70D- □□Q□□D□1□□□□□□□□□	N-IO field enclosure
	A2NN60D-□□Q□□1□□□□	N-IO field enclosure base unit
	A2CB60-B□1□□□□□□□□ A2CB60-D□1□□□□□□□□	Enclosure for A2NN60D
	A2CX100 (*2)	Sealing module set for N-IO field enclosure
Unit	ANT10U-□□E ANT10U-□□F	Unit for Optical ESB Bus Repeater Module

Note: Any accessories for maintenance are FM NI approved products.

*1: AFV30S/D, AFV10S/D, AW810D, and A2FV50S/D requires L2 switch to connect to a network.
For L2 switch, select and use one that can be installed at Class I, Division 2 area and conforms to FM NI or UL1604.

*2: A2CX100 used in the N-IO field enclosure comply with FM NI.

Table The List of FM NI Compliant Products (2/4)

Classifications	Type names	Products
Router	AW810D-A2□0□E AW810D-A2□0□F (*1)	Wide Area Communication Router
Processor module	CP451-E□	Processor module
	CP461-E□	Processor module
	CP471-1□	Processor module
Communication module	VI461-2E□	Communication module
Power supply module	PW441-E□	100 V AC power supply module
	PW442-E□	200 V AC power supply module
	PW444-E□	24 V DC power supply module
	PW481-E□	100 V AC power supply module
	PW482-E□ (*3)	220 V AC power supply module
	PW484-E□	24 V DC power supply module
	A2PW503-S□1□□	24 V DC power supply unit
	A2PW504-S□1□□	24 V DC power supply unit
Bus interface module	SB401-E□	ESB bus interface slave module
	EB501-E□	ER bus interface slave module
	EB511-E□	ER bus interface slave module
	ANT502-E□	Optical ESB Bus Repeater Slave Module
	ANT512-E□	Optical ESB Bus Repeater Slave Module
	ANT522-E□	Optical ESB Bus Repeater Slave Module (for Multimode Fiber)
	A2EN402-S□□1□	N-ESB Bus Coupler Module
	A2EN404-S□□1□	N-ESB Bus Coupler Module
	A2EN501-S□□1□□	N-ESB Bus Module
I/O module	AAI143-□E□	Analog input module (4 to 20 mA, 16 points, whole insulation)
	AAI543-□E□ AAI543-□F□	Analog output module (4 to 20 mA, 16 points, whole insulation)
	AAV144-SE□	Analog input module (-10 to +10 V, 16 points, whole insulation)
	AAV544-SE□	Analog output module (-10 to +10 V, 16 points, whole insulation)
	AAI135-□E□	Analog input module (4 to 20 mA, 8 points, individual insulation)
	AAI835-□E□	Analog I/O module (4 to 20 mA, 4 points input /4 points output, individual insulation)
	AAP135-SE□	Pulse input module (0 to 10 kHz, 8 points, individual insulation)
	AAT145-SE□	Thermocouple/mV input module (16 points, individual insulation)
	AAR145-SE□	RTD/slide rheostat input module (16 points, individual insulation)
	ADV151-PE□ ADV151-PF□	Digital input module (32 points, pulse-count function)
	ADV551-PE□ ADV551-PF□	Digital output module (32 points, pulse with output function)
	ADV161-PE□	Digital input module (64 points, pulse-count function)
	ADV561-PE□	Digital output module (64 points, pulse-count function)
	ALR111-SE□	RS-232C communication module (2-port, 1200 bps to 115.2 kbps)
	ALR121-SE□	RS-422/RS-485 serial communication module (2-port, 1200 bps to 115.2 kbps)
	ALE111-SE□	Ethernet communication module
	ALF111-SE□	Foundation Fieldbus (FF-H1) communication module
	ADCV01	Dummy cover
	A2MMM843-SS□1□□	Analog Digital I/O Module (16-channel, Isolated)
	A2MDV843-0S□1□□	Digital I/O Module (16-channel, Isolated)

Note: Any accessories for maintenance are FM NI approved products.

*1: AFV30S/D, AFV10S/D, AW810D, and A2FV50S/D requires L2 switch to connect to a network.
For L2 switch, select and use one that can be installed at Class I, Division 2 area and conforms to FM NI or UL1604.

*3: The power supply input terminal-N of PW482 shall be connected to the neutral line (N) of the main power supply.

Table The List of FM NI Compliant Products (3/4)

Classifications	Type names	Products
I/O Adaptor	A2SMX801-S1□□	Pass-through I/O Signal Adaptor (Pass-through I/O Signal)
	A2SMX802-S1□□	Pass-through I/O Signal Adaptor (with field power output)
	A2SAM105-H1□□	Current Input/Voltage Input Adaptor
	A2SAM505-H1□□	Current Output/Voltage Output Adaptor
	A2SAP105-S1□□	Pulse Input Signal Adaptor (0 to 10 kHz)
	A2SAT105-S1□□	mV/TC/RTD Input Adaptor
	A2SDV105-S1□□	Digital Input Adaptor (24 V DC Voltage Input, Dry Contact Input)
	A2SDV505-S1□□	Digital Output Adaptor (24 V DC, Current Source: 0.5 A)
	A2SDV506-S1□□	Relay Output Adaptor (24 V DC, Dry Contact Output: 0.5 A)
Terminal block	ATA4S	Single press-tightening terminal block for analog
	ATB5S	Single press-tightening terminal block for digital input
	ATD5S	Single press-tightening terminal block for digital output
	ATI3S	Single press-tightening terminal block for analog individual insulation
	ATF9S	Press-tightening terminal block for Foundation Fieldbus
	ATA4D	Duplicated press-tightening terminal block for analog
	ATB5D	Duplicated press-tightening terminal block for digital input
	ATD5D	Duplicated press-tightening terminal block for digital output
	ATI3D	Duplicated press-tightening terminal block for analog individual insulation
	ATK4A	KS cable interface adapter (for analog)
	ATI3A	KS cable interface adapter (for AAI135, AAP135)
	ATB3A	KS cable interface adapter (for AAI835)
	ATD5A	KS cable interface adapter (for digital)
Terminal board	AEA3D-0E AEA3D-0F	Analog/single, Duplicated terminal board (8 points x 4)
	AEA4D-0E AEA4D-0F	Analog/single, Duplicated terminal board (16 points x 2 or 8 points x 2)
	A1BA4D-0E A1BA4D-0F	Terminal Board for Analog (16 points x 1 or 8 points x 1)
	AET4D-0E AET4D-0F	Thermocouple/single, Duplicated terminal board (16 points x 2)
	A1BT4D-0E A1BT4D-0F	Terminal Board for Tehrmocouple (16 points x 1)
	AER4D-0E AER4D-0F	RTD/ slide rheostat single, duplicated terminal board (16 points)
	A1BR4D-0E A1BR4D-0F	Terminal Board for RTD input (16 points x 1)
	AED5D-0E AED5D-0F	Digital/single, duplicated terminal board (32 points x 2)
	A1BD5D-0E A1BD5D-0F	Terminal Board for Digital (32 points x 1)
	AEF9D-0E AEF9D-0F	Fieldbus/single, duplicated terminal board
	A2BM4-1□0	Terminal board for analog digital I/O
Bus cable	YCB301	ESB bus cable
	YCB141	ER bus cable
	YCB311	ER bus extension cable
	YCB147-E YCB147-F	ER bus cable conversion adaptor
	YCB138	Fieldbus terminator

Note: Any accessories for maintenance are FM NI approved products.

Table The List of FM NI Compliant Products (4/4)

Classifications	Type names	Products
Signal cable	AKB331	Signal cable (between ADV151, ADV551 and terminal board), (between A2BN3D and terminal board)
	AKB335	Signal cable (for connection between AAR145 and AER4D)
	AKB336	Signal cable (between ALF111 and terminal board)
	AKB337	Signal cable (between ADV161, ADV561 and terminal board)
	AKB651	Signal cable (between A2BN3D and terminal board)
	KS1	Signal cable
	AKB131	RS-232C cable(for connection between ALR111and Modem)
	AKB132	RS-232C cable(for connection between ALR111and RS-232C Device)
	AKB133	RS-232C cable(for connection between ALR111and FA-M3)
	AKB134	RS-232C cable(for connection between ALR111and RS-232C Device)
	AKB135	RS-232C cable(for connection between ALR111 and Modem)
	AKB136	RS-232C cable(for connection between ALR111 and RS-232C Device)
	AKB161	RS-422/RS-485 cable (for connection between ACM12 and FA500)
	AKB162	RS-422/RS-485 cable (for connection between ACM12 and YS)
I/O module	EB401-E□	ER bus interface master module
	EB402-E□	ER bus interface master module
	EC401-E□	ESB bus coupler module
	EC402-E□	ESB Bus Coupler Module
	ANT401-E□	Optical ESB Bus Repeater Master Module
	ANT411-E□	Optical ESB Bus Repeater Master Module
	ANT421-E□	Optical ESB Bus Repeater Master Module (for Multimode Fiber)
Distribution unit	AEP7D-□E AEP7D-□F	Primary distribution unit
	AEPV7D-□□E AEPV7D-□□F	Power Supply Bus Unit, Vertical Type
	AEP9D-4E AEP9D-4F	Secondary distribution unit

Note: Any accessories for maintenance are FM NI approved products.

Parameters of FM NI Compliant Equipments

FIO

The table below shows the list of source devices for FM NI equipments.

Table FIO Parameters (The Source Devices) (1/2)

Module name		Voc (V)	Isc (mA)	Ca (μF)	La (mH)	Remarks (*1)
AFV10S-S□1□E1 AFV10S-S□1□F1	TM1	—	—	—	—	(*2)
AFV10D-S41□E1 AFV10D-S41□F1	TM1	—	—	—	—	(*2)
AFV30S-□□1□E□ AFV30S-□□1□F□	TM1	—	—	—	—	(*2)
AFV30D-□41□E□ AFV30D-□41□F□	TM1	—	—	—	—	(*2)
AW810D-A2□0□E AW810D-A2□0□F	–	—	—	—	—	(*2)
CP451-E□	Redundant	—	—	—	—	(*2)
	Single	—	—	—	—	
CP461-E□	Redundant	—	—	—	—	(*2)
	Single	—	—	—	—	
CP471-1□	Redundant	—	—	—	—	(*2)
	Single	—	—	—	—	
VI461-2E□	Redundant	—	—	—	—	(*2)
SB401-E□	Redundant	—	—	—	—	(*2)
	Single	—	—	—	—	
EB501-E□	Redundant	9.4	45.0	0.39	0.46	With terminator resister 50Ω
	Single	9.4	45.0	0.39	0.46	
EB511-E□	Redundant	—	—	—	—	(*2)
	Single	—	—	—	—	
ANT502-E□	Redundant	—	—	—	—	(*2)
	Single	—	—	—	—	
ANT512-E□	Redundant	—	—	—	—	(*2)
	Single	—	—	—	—	
ANT522-E□	Redundant	—	—	—	—	(*2)
	Single	—	—	—	—	
AAI143-□E□	Redundant	25.5	24.4	0.19	10.0	2-wire transmitter input
	Single	25.5	24.4	0.19	10.0	
AAI543-□E□ AAI543-□F□	Redundant	24.3	23.0	0.19	10.0	
	Single	24.3	23.0	0.19	10.0	
AAV544-SE□	Redundant	11.8	12.5	0.27	20.0	
	Single	11.8	12.5	0.4	20.0	
AAI135-□E□	Redundant	29.3	31.0	0.12	10.0	2-wire transmitter input
	Single	29.3	31.0	0.12	10.0	
AAI835-□E□ Input	Redundant	29.3	31.0	0.12	10.0	2-wire transmitter input
	Single	29.3	31.0	0.12	10.0	
AAI835-□E□ Output	Redundant	29.3	23.0	0.12	10.0	
	Single	29.3	23.0	0.12	10.0	
AAP135-SE□	Redundant	—	—	—	—	(*2)
	Single	—	—	—	—	

*1: Without any mode name in the appropriate remarks column, these parameters are valid for any operation mode of the module (type name).
*2: Wirings must comply with NEC (National Electrical Code: ANSI/NFPA-70) or the regulations of the relevant country.

Table FIO Parameters (The Source Devices) (2/2)

Module name		Voc (V)	Isc (mA)	Ca (μF)	La (mH)	Remarks (*1)
AAT145-SE□	Redundant	5.0	0.5	1.0	20.0	RJC input
	Single	5.0	0.5	1.0	20.0	
	Redundant	16.5	33.4	0.3	0.8	Power supply for RJC
	Single	16.5	16.7	0.3	0.8	
	Redundant	16.5	33.0	0.3	0.8	Cable coming out detection
	Single	16.5	16.5	0.3	0.8	
AAR145-SE□	Redundant	5.0	1.1	1.0	20.0	RTD/POT input
	Single	5.0	1.1	1.0	20.0	
	Redundant	26.4	52.8	0.3	0.8	Cable coming out detection
	Single	26.4	26.4	0.3	0.8	
ADV151-PE□ ADV151-PF□	Redundant	—	—	—	—	Contact input mode (*2)
	Single	—	—	—	—	
ADV551-PE□ ADV551-PF□	Redundant	—	—	—	—	Voltage output mode(*2)
	Single	—	—	—	—	
ADV161-PE□	Redundant	—	—	—	—	Contact input mode(*2)
	Single	—	—	—	—	
ADV561-PE□	Redundant	—	—	—	—	Voltage output mode(*2)
	Single	—	—	—	—	
ALR111-SE□	Redundant	—	—	—	—	(*2)
	Single	—	—	—	—	
ALR121-SE□	Redundant	—	—	—	—	(*2)
	Single	—	—	—	—	
ALE111-SE□	Redundant	—	—	—	—	(*2)
	Single	—	—	—	—	
ALF111-SE□	Redundant	—	—	—	—	(*2)
	Single	—	—	—	—	
EB401-E□	Redundant	9.4	45.0	0.39	0.46	With terminator resister 50Ω
	Single	9.4	45.0	0.39	0.46	
EB402-E□	Redundant	—	—	—	—	(*2)
	Single	—	—	—	—	
EC401-E□	Redundant	—	—	—	—	(*2)
	Single	—	—	—	—	
EC402-E□	Redundant	—	—	—	—	(*2)
	Single	—	—	—	—	
ANT401-E□	Redundant	—	—	—	—	(*2)
	Single	—	—	—	—	
ANT411-E□	Redundant	—	—	—	—	(*2)
	Single	—	—	—	—	
ANT421-E□	Redundant	—	—	—	—	(*2)
	Single	—	—	—	—	
AEP7D-□E AEP7D-□F	CN1 to CN14	—	—	—	—	(*2)
AEPV7D-□□E AEPV7D-□□F	CN1 to CN7	—	—	—	—	(*2)
AEP9D-4E AEP9D-4F	CN1 to CN18	—	—	—	—	(*2)

*1: Without any mode name in the appropriate remarks column, these parameters are valid for any operation mode of the module (type name).
*2: Wirings must comply with NEC (National Electrical Code: ANSI/NFPA-70) or the regulations of the relevant country.

The table below shows the list of load devices receive energy from FM NI equipments.

Table FIO Parameters (The Load Devices) (1/2)

Module name		Vmax (V)	Imax (mA)	Ci (μF)	Li (μH)	Remarks (*1)
AFV10S-S□1□E1 AFV10S-S□1□F1	TM2	—	—	—	—	(*2)
AFV10D-S41□E1 AFV10D-S41□F1	TM2	—	—	—	—	(*2)
AFV30S-□□1□E□ AFV30S-□□1□F□	TM2	—	—	—	—	(*2)
AFV30D-□41□E□ AFV30D-□41□F□	TM2	—	—	—	—	(*2)
AW810D-A2□0□E AW810D-A2□0□F	–	—	—	—	—	(*2)
CP451-E□	Redundant	—	—	—	—	(*2)
	Single	—	—	—	—	
CP461-E□	Redundant	—	—	—	—	(*2)
	Single	—	—	—	—	
CP471-1□	Redundant	—	—	—	—	(*2)
	Single	—	—	—	—	
VI461-2E□	Redundant	—	—	—	—	(*2)
PW441-E□	Redundant	—	—	—	—	(*2)
PW442-E□	Redundant	—	—	—	—	(*2)
PW444-E□	Redundant	—	—	—	—	(*2)
PW481-E□	Redundant	—	—	—	—	(*2)
	Single	—	—	—	—	
PW482-E□	Redundant	—	—	—	—	(*2)
	Single	—	—	—	—	
PW484-E□	Redundant	—	—	—	—	(*2)
	Single	—	—	—	—	
SB401-E□	Redundant	—	—	—	—	(*2)
	Single	—	—	—	—	
EB501-E□	Redundant	10.0	0.9 μA	8.0 pF	0.1	With terminator resister 50Ω
	Single	10.0	0.9 μA	8.0 pF	0.1	
EB511-E□	Redundant	—	—	—	—	(*2)
	Single	—	—	—	—	
ANT502-E□	Redundant	—	—	—	—	(*2)
	Single	—	—	—	—	
ANT512-E□	Redundant	—	—	—	—	(*2)
	Single	—	—	—	—	
ANT522-E□	Redundant	—	—	—	—	(*2)
	Single	—	—	—	—	
AAI143-□E□	Redundant	25.5	26.3	7000 pF	10.0	4-wire transmitter input
	Single	25.5	26.3	3500 pF	10.0	
AAV144-SE□	Redundant	30.0	0.28	0.001	10.0	When power is turned on, Rin = 1 MΩ or more (*3)
	Single	30.0	0.14	0.001	10.0	
AAI135-□E□	Redundant	24.0	31.0	5000 pF	10.0	4-wire transmitter input
	Single	24.0	31.0	5000 pF	10.0	
AAI835-□E□ Input	Redundant	24.0	31.0	5000 pF	10.0	4-wire transmitter input
	Single	24.0	31.0	5000 pF	10.0	
AAP135-SE□	Redundant	26.4	30.0	5000 pF	10.0	
	Single	26.4	30.0	5000 pF	10.0	

*1: Without any mode name in the appropriate remarks column, these parameters are valid for any operation mode of the module (type name).
*2: Wirings must comply with NEC (National Electrical Code: ANSI/NFPA-70) or the regulations of the relevant country.
*3: Since the parameters such as Imax are calculated according to the internal impedance (Imax=Vmax/Rin), the case of Isc ≤ Imax in “How to compare parameters” in “3.1.2 FM Non-Incendiv “ is omissible.
Make sure that the target equipment can be connected with this module has Rin : internal impedance described in remarks column.

Table FIO Parameters (The Load Devices) (2/2)

Module name		Vmax (V)	Imax (mA)	Ci (μF)	Li (μH)	Remarks (*1)
AAT145-SE□	Redundant	5.0	1.0	0.0015	12.6	TC/mV input
	Single	5.0	1.0	0.001	12.6	
ADV151-PE□ ADV151-PF□	Redundant	30.0	11.0	0.001	10.0	Voltage input mode, Rin = 5.6 kΩ (*3)
	Single	30.0	5.5	0.001	10.0	
ADV551-PE□ ADV551-PF□	Redundant	26.4	100.0	0.28	10.0	ON/OFF status output mode, Without surge absorber
	Single	26.4	100.0	0.14	10.0	ON/OFF status output mode
ADV161-PE□	Redundant	30.0	6.7	0.001	10.0	Voltage input mode, Rin = 9.1 kΩ (*3)
	Single	30.0	3.4	0.001	10.0	
ADV561-PE□	Redundant	26.4	100.0	0.275	0	ON/OFF status output mode
	Single	26.4	100.0	0.138	0	
ALR111-SE□	Redundant	—	—	—	—	(*2)
	Single	—	—	—	—	
ALR121-SE□	Redundant	—	—	—	—	(*2)
	Single	—	—	—	—	
ALE111-SE□	Redundant	—	—	—	—	(*2)
	Single	—	—	—	—	
ALF111-SE□	Redundant	—	—	—	—	(*2)
	Single	—	—	—	—	
EB401-E□	Redundant	10.0	0.9 μA	8.0 pF	0.1	With terminator resister 50 Ω
	Single	10.0	0.9 μA	8.0 pF	0.1	
EB402-E□	Redundant	—	—	—	—	(*2)
	Single	—	—	—	—	
EC401-E□	Redundant	—	—	—	—	(*2)
	Single	—	—	—	—	
EC402-E□	Redundant	—	—	—	—	(*2)
	Single	—	—	—	—	
ANT401-E□	Redundant	—	—	—	—	(*2)
	Single	—	—	—	—	
ANT411-E□	Redundant	—	—	—	—	(*2)
	Single	—	—	—	—	
ANT421-E□	Redundant	—	—	—	—	(*2)
	Single	—	—	—	—	
AEP7D-□E AEP7D-□F	TM1,TM2	—	—	—	—	(*2)
AEPV7D-□□E AEPV7D-□□F	TM1	—	—	—	—	(*2)
AEP9D-4E AEP9D-4F	TM1,TM2	—	—	—	—	(*2)
A1BD5D-□E A1BD5D-□F	TM3	—	—	—	—	Ready input(*2)
		60	20	0	0	Ready input DC

*1: Without any mode name in the appropriate remarks column, these parameters are valid for any operation mode of the module (type name).
*2: Wirings must comply with NEC (National Electrical Code: ANSI/NFPA-70) or the regulations of the relevant country.
*3: Since the parameters such as Imax are calculated according to the internal impedance (Imax=Vmax/Rin), the case of Isc ≤ Imax in “How to compare parameters” in “3.1.2 FM Non-Incendiv “ is omissible.
Make sure that the target equipment can be connected with this module has Rin : internal impedance described in remarks column.

Table Cable Parameters

Module	Lc (μH/m)	Cc (pF/m)	Remark (*1)
YCB301	—	—	(*2)
YCB141	0.25	100.0	
YCB311	0.22	85.0	
KS1	1.5	110.0	
AKB331	1.5	110.0	
AKB335	1.5	110.0	
AKB336	—	—	(*2)
AKB337	1.5	110.0	
AKB131	—	—	(*2)
AKB132	—	—	(*2)
AKB133	—	—	(*2)
AKB134	—	—	(*2)
AKB135	—	—	(*2)
AKB136	—	—	(*2)
AKB161	—	—	(*2)
AKB162	—	—	(*2)

*1: Without any mode name in the appropriate remarks column, these parameters are valid for any operation mode of the module (type name).
*2: Wirings must comply with NEC (National Electrical Code: ANSI/NFPA-70) or the regulations of the relevant country.

N-IO

Refer to Appendix 2 for the parameter of A2MMM843, A2MDV843, A2SAM105, A2SAM505, A2SAP105, A2SAT105, A2SDV105, A2SDV506, A2NN70D, and A2NN60D.

Table Cable Parameters

Module	Lc (μH/m)	Cc (pF/m)	Remark
AKB331	1.5	110.0	
AKB651	—	—	(*1)

*1: Wirings must comply with NEC (National Electrical Code: ANSI/NFPA-70) or the regulations of the relevant country.

Appendix 2. FM NI/CSA NI Control Drawing for CENTUM VP N-IO

Model: CENTUM VP N-IO Date: April 28, 2015

Control Drawing (US)

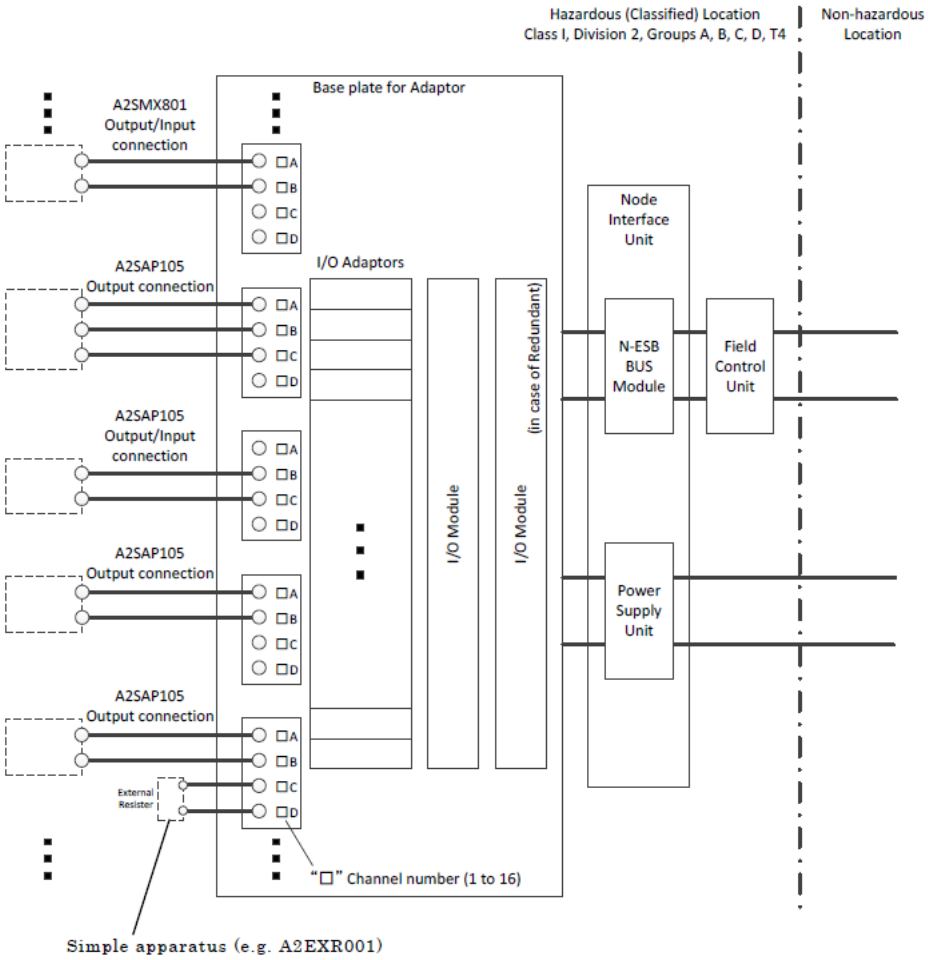

Rev.2: June 30, 2017 Doc. No.: NIE008-A101 P.1

Yokogawa Electric Corporation

F020101.ai

Model: CENTUM VP N-IO Date: April 28, 2015

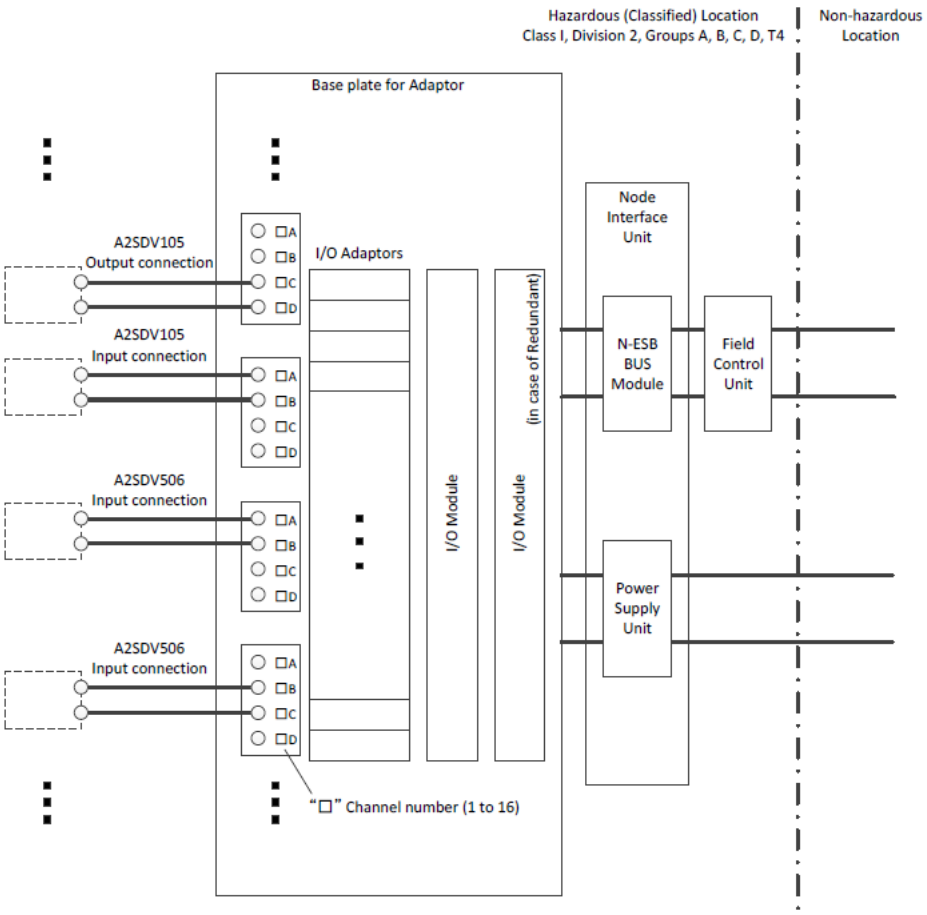

Rev.1: October 31, 2016 Doc. No.: NIE008-A101 P.2

Yokogawa Electric Corporation

F020102.ai

Model: CENTUM VP N-IO Date: June 30, 2017

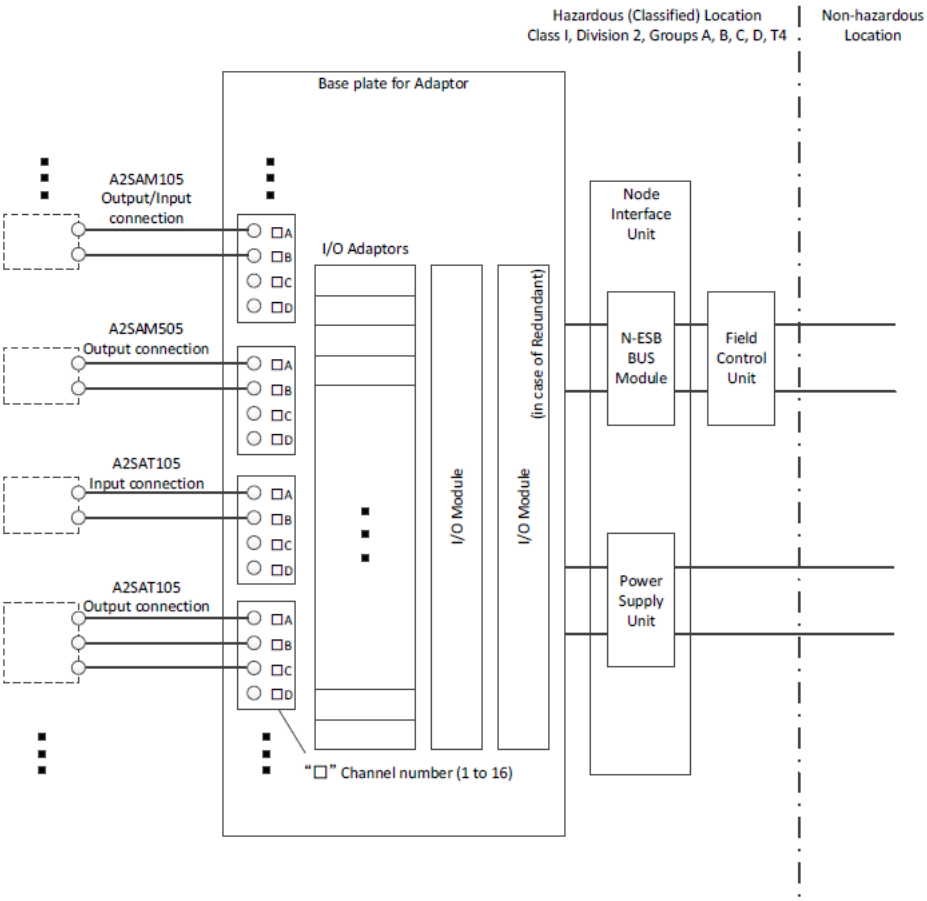

Rev. Doc. No.: NIE008-A101 P.2-1

Yokogawa Electric Corporation

F020103.ai

Model: CENTUM VP N-IO Date: July 12, 2019

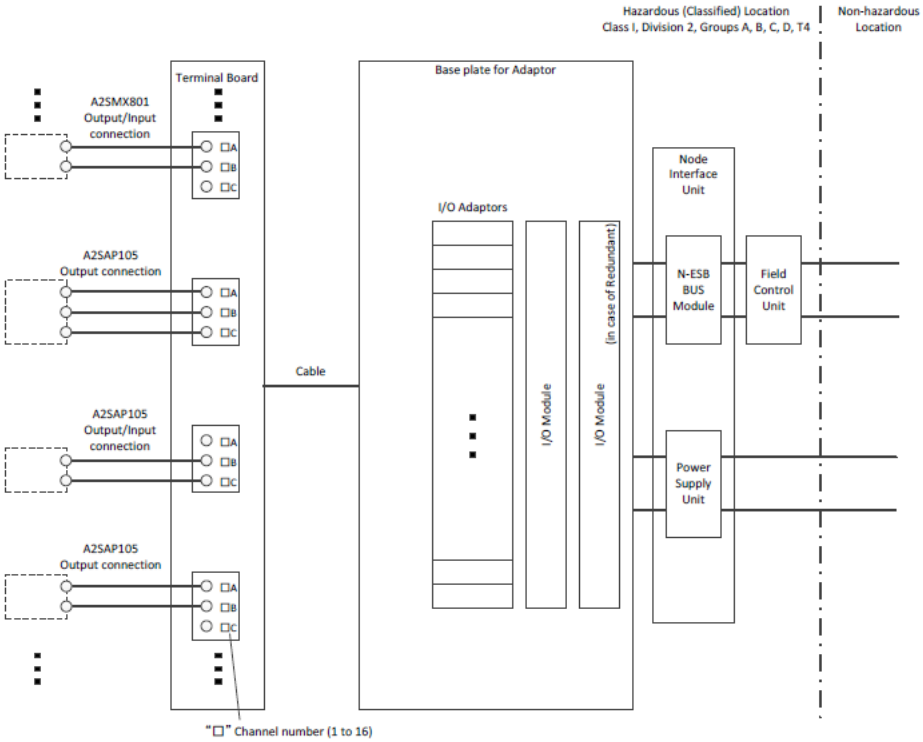

Rev. Doc. No.: NIE008-A101 P.2-2

Yokogawa Electric Corporation

F020104.ai

Model: CENTUM VP N-IO Date: July 12, 2019

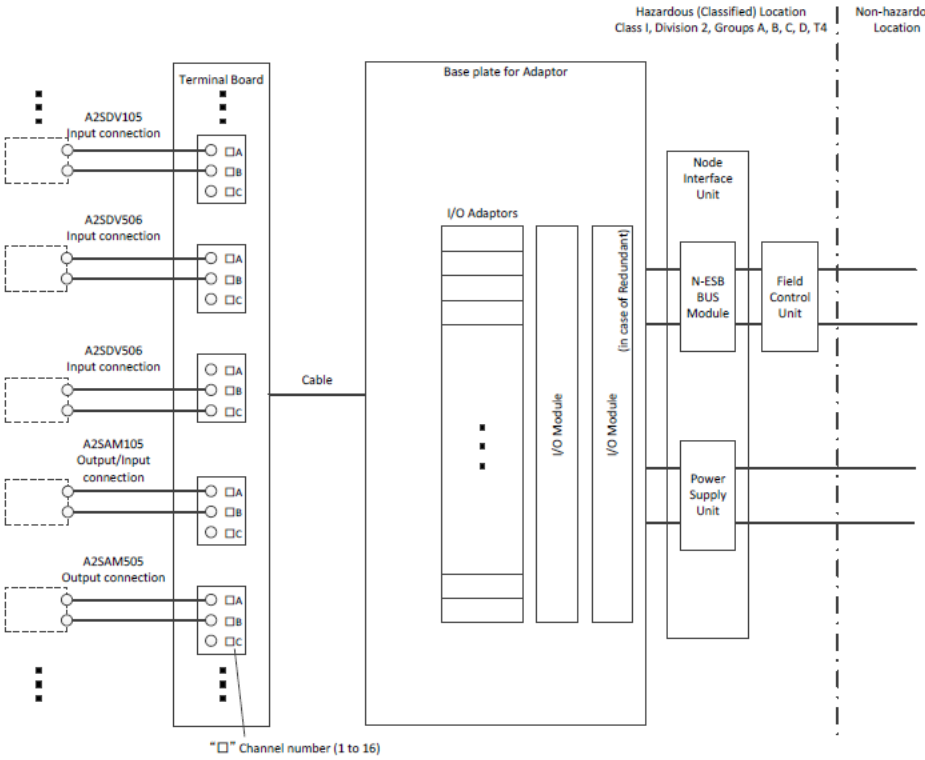

Rev. Doc. No.: NIE008-A101 P.2-3

Yokogawa Electric Corporation

F020105.ai

Model: CENTUM VP N-IO Date: April 28, 2015

Nonincendive field wiring parameters (Output parameters)

Model		Function	Voc(V)	Isc(mA)	Ca(μF)	La(mH)	Remark
A2MMM843	Redundant	Analog Input (Current Input)	24.0	26.0	0.05	0.66	2-wire transmitter input
	Single						
	Redundant	Analog Output (Current Output)	28.0	23.0	0.05	0.66	
	Single						
	Redundant	Digital Input	30.0	7.2	0.05	0.66	Dry contact input
	Single						
	Redundant	Digital Input	12.0	16.0	0.05	0.66	NAMUR Standard Compliant
	Single						
	Redundant	Digital Output	28.0	25.0	0.05	0.66	
	Single						
A2MDV843	Redundant	Digital Input	30.0	7.2	0.05	0.66	Dry contact input
	Single						
	Redundant	Digital Input	12.0	16.0	0.05	0.66	NAMUR Standard Compliant
	Single						
	Redundant	Digital Output	28.0	25.0	0.05	0.66	
	Single						
A2SAP105	Single	For all types of connections	26.4	40.0	0.19	0.15	
A2SDV105	Single	—	26.4	20.0	0.1	1.32	Dry contact input Between C-D terminal
A2SAM105	Single	Current Input	24.0	40.0	0.05	0.66	2-wire Transmitter input
A2SAM505	Single	Current Output	25.5	23.0	0.05	0.66	
		Voltage Output	25.5	15.0	0.05	0.66	
A2SAT105	Single	RTD/POT Input	5.5	3.0	0.45	3.74	
		mV/TC Input					

Rev.3: June 30, 2017 Doc. No.: NIE008-A101 P.3

Yokogawa Electric Corporation

F020106.ai

Note: For the nonincendive field parameter of Analog/Digital I/O modules mounted in A2FV50, refer to "● FIO" in "■ FM NI compatible product parameters" in this TI.

Model: CENTUM VP N-IO Date: June 30, 2017

Nonincendive field wiring parameters (Input parameters)

Model		Function	Vmax (V)	Imax (mA)	Ci(μF)	Li(μH)	Remark
A2MMM843	Redundant	Analog Input (Current Input)	24.0	—	0.06	10	4-wire transmitter input
	Single						
	Redundant	Digital Output	30.0	100	0.06	10	Current sink
	Single						
A2MDV843	Redundant	Digital Output	30.0	100	0.06	10	Current sink
	Single						
A2SAP105	Single	—	26.4	—	0.01	10	Between B-C terminal
A2SDV105	Single	—	30.0	—	0.01	10	24V DC Voltage input
A2SDV506	Single	—	30.0	100	0.01	10	
A2SAM105	Single	Current Input Voltage Input	30.0	—	0.01	10	Current Input (4-wire transmitter input)
A2SAT105	Single	mV/TC Input	4.0	—	0.1	10	

Rev. Doc. No.: NIE008-A101 P.3-1

Yokogawa Electric Corporation

F020107.ai

Model: CENTUM VP N-IO Date: April 28, 2015

Specific condition of use:
- The equipment shall be installed in a lockable metal cabinet. The suitability of the installation shall be determined by the authority having jurisdiction.
- The Ambient Temperatures are as follows.

Model code	Ambient Temperature
A2FV50S	0 to 50 °C
A2FV50D	0 to 50 °C
A2NN30D-4a0b0cd1ef	When cd = 00 and e = 0, 1 0 to 60 °C When cd = 00 and e = 2, 3 −40 to 70 °C When cd = 01, 11, 21, 02, 12, 22, 10, 20 and e = 0, 1 0 to 60 °C When cd = 01, 11, 21, 02, 12, 22, 10, 20 and e = 2, 3 −40 to 70 °C (altitude ≤ 2000 m) When cd = 01, 11, 21, 02, 12, 22, 10, 20 and e = 2, 3 −40 to 60 °C (2000 m < altitude ≤ 3000 m)
A2PW503-S01a0b	When a = 0, 1 0 to 60 °C When a = 2, 3 −40 to 70 °C
A2PW504-S01a0b	When a = 0, 1 0 to 60 °C When a = 2, 3 −40 to 70 °C
A2EN402	−20 to 70 °C
A2EN404	−20 to 70 °C
A2EN501-Sab1c0d	When ab = 00 and c = 0, 1 0 to 60 °C When ab = 00 and c = 2, 3 −40 to 70 °C When ab = 01, 11, 21, 02, 12, 22, 10, 20 and c = 0, 1 0 to 60 °C When ab = 01, 11, 21, 02, 12, 22, 10, 20 and c = 2, 3 −40 to 70 °C (altitude ≤ 2000 m) When ab = 01, 11, 21, 02, 12, 22, 10, 20 and c = 2, 3 −40 to 60 °C (2000 m < altitude ≤ 3000 m)

Rev.2: July 12, 2019 Doc. No.: NIE008-A101 P.4

Yokogawa Electric Corporation

F020108.ai

Model: CENTUM VP N-IO Date: July 12, 2019

(Continued)

Model code	Ambient Temperature
A2MMM843-SS11a0	When a = 0, 1 0 to 60 °C When a = 2, 3 −40 to 70 °C (*1, 6)
A2MDV843-0S11a0	When a = 0, 1 0 to 60 °C When a = 2, 3 −40 to 70 °C (*6)
A2SAP105-S1a0	When a = 0, 1 0 to 60 °C When a = 2, 3 −40 to 70 °C (*2, 6)
A2SDV105-S1a0	When a = 0, 1 0 to 60 °C When a = 2, 3 −40 to 70 °C (*4, 6)
A2SDV505-S1a0	When a = 0, 1 0 to 60 °C When a = 2, 3 −40 to 70 °C (*4, 6)
A2SDV506-S1a0	When a = 0, 1 0 to 60 °C When a = 2, 3 −40 to 70 °C (*3, 6)
A2SMX801-S1ab	When a = 0, 1 0 to 60 °C When a = 2, 3 −40 to 70 °C (*4, 6)
A2SAM105-H1a0	When a = 0, 1 0 to 60 °C When a = 2, 3 −40 to 70 °C (*2, 6)
A2SAM505-H1a0	When a = 0, 1 0 to 60 °C When a = 2, 3 −40 to 70 °C (*2, 6)

Rev.1: October 7, 2019 Doc. No.: NIE008-A101 P.4-1

Yokogawa Electric Corporation

F020109.ai

Model: CENTUM VP N-IO Date: July 12, 2019

(Continued)

Model code	Ambient Temperature
A2SAT105-S1a0	When a = 0, 1 0 to 60 °C When a = 2, 3 −40 to 70 °C (*4, 6)
A2SMX802-S1a0	When a = 0, 1 0 to 60 °C When a = 2, 3 −40 to 70 °C (*4, 6)
A2BN3D-ab1cde	When c = 0, 1 0 to 60 °C When c = 2, 3 and, b = 0, 1, 2 −40 to 70 °C (*1) When c = 2, 3 and, b = 9 −40 to 70 °C (*1, 5)
A2BM4-1a0	When a = 0, 1 0 to 60 °C When a = 2, 3 −40 to 70 °C (*5)

(*1) If A2MMM843 and A2SDV506 are mounted on a base plate, and any of A2SAM105, A2SAM505, or A2SAP105 is also mounted on the same base plate, the maximum temperature is limited to 60 °C.
(*2) If the adaptor is mounted on the same base plate that A2SDV506 is mounted, the maximum temperature is limited to 60 °C.
(*3) If the adaptor and any of A2SAM105, A2SAM505, or A2SAP105 are mounted on the same base plate, the maximum temperature is limited to 60 °C.
(*4) If the adaptor and A2SDV506 are mounted on a base plate, and any of A2SAM105, A2SAM505, or A2SAP105 is also mounted on the same base plate, the maximum temperature is limited to 60 °C.
(*5) The minimum temperature is limited to −20 °C for using AKB331 or AKB651 together.
(*6) If it is mounted on A2BN3D-x9120 or A2BN3D-x9130, the minimum temperature is limited to −20 °C for using AKB331 or AKB651 together.

Rev.1: October 7, 2019 Doc. No.: NIE008-A101 P.4-2

Yokogawa Electric Corporation

F020110.ai

Model: CENTUM VP N-IO Date: July 12, 2019

Notes:

1. No revision to this drawing without prior approval of FM.

2. In this control drawing, the term "installation" includes reconfiguration of the function of each module, which is carried out in maintenance process.

3. Installation must be in accordance with the National Electrical Code (NFPA 70) and relevant local codes.

4. In the course of installation, the related documents of GS (General specifications), TI (Technical Information of Installation Guidance), and IM (User's Manuals) should be referred to and the instructions described in the documents should be observed.

5. Modules can be mounted also on an FM-approved Base Plates A2BN4D or A2BN5D. In such case, installation must be in accordance also with the control drawing of these Base Plates.

6. CENTUM VP IS SUITABLE FOR USE IN CLASS 1, DIVISION 2, GROUPS A, B, C, and D OR NONHAZARDOUS LOCATIONS ONLY.

7. It must be observed during the installation that the venting slots of the devices are not blocked by cable parts, fixing accessories etc.

8. The doors of the cabinets must be closed when CENTUM VP is energized.

9. Nonincendive field wiring is permitted for the modules listed in tables of the Nonincendive field wiring parameters.

9.1 The Nonincendive field wiring circuit concept allows interconnection of nonincendive field wiring apparatus with associated nonincendive field wiring apparatus, using any of the wiring methods permitted for unclassified locations.

9.2 Field equipment or other equipment connected to CENTUM VP by Nonincendive field wiring must be FM approved.

9.3 The control drawing of field equipment or other equipment must be followed at the installation.

9.4 The following conditions must be met. See tables for the Nonincendive field wiring parameters of CENTUM VP.

$$V_{max} \geq V_{oc} \text{ or } V_t;\ I_{max} \geq I_{sc} \text{ or } I_t;\ C_a \geq C_i + C_{cable};\ L_a \geq L_i + L_{cable}$$

9.5 For current controlled circuits, Imax of the nonincendive field wiring apparatus is not required and need not be aligned with parameter Isc or It of CENTUM VP or other associated nonincendive field wiring apparatus.

9.6 For the nonincendive field wiring parameters of Analog/Digital I/O modules mounted in A2FV50□, control drawing NFM020-A13 must be referred to.

Rev. Doc. No.: NIE008-A101 P.4-3

Yokogawa Electric Corporation

F020111.ai

Model: CENTUM VP N-IO Date: April 28, 2015

10. WARNING – SUBSTITUTION OF COMPONENTS MAY IMPAIR SUITABILITY FOR DIVISION 2.

11. WARNING – EXPLOSION HAZARD. DO NOT DISCONNECT EQUIPMENT WHEN A FLAMMABLE OR COMBUSTIBLE ATMOSPHERE IS PRESENT.

12. WARNING – EXPLOSION HAZARD. DO NOT REMOVE OR REPLACE FUSES UNLESS POWER HAS BEEN DISCONNECTED OR WHEN A FLAMMABLE OR COMBUSTIBLE ATMOSPHERE IS PRESENT.

13. WARNING – EXPLOSION HAZARD. DO NOT OPEN ENCLOSURE OR REPLACE BATTERY WHEN A FLAMMABLE OR COMBUSTIBLE ATMOSPHERE IS PRESENT.

14. WARNING – EXPOSURE TO SOME CHEMICALS MAY DEGRADE THE SEALING PROPERTIES OF MATERIALS USED IN THE RELAYS INCORPORATED IN THE FOLLOWING MODULES:

    A2FV50S

    A2FV50D

    A2SDV506

Rev. Doc. No.: NIE008-A101 P.5

Yokogawa Electric Corporation

F020112.ai

Model: CENTUM VP N-IO Date: April 28, 2015

Control Drawing (Canada)

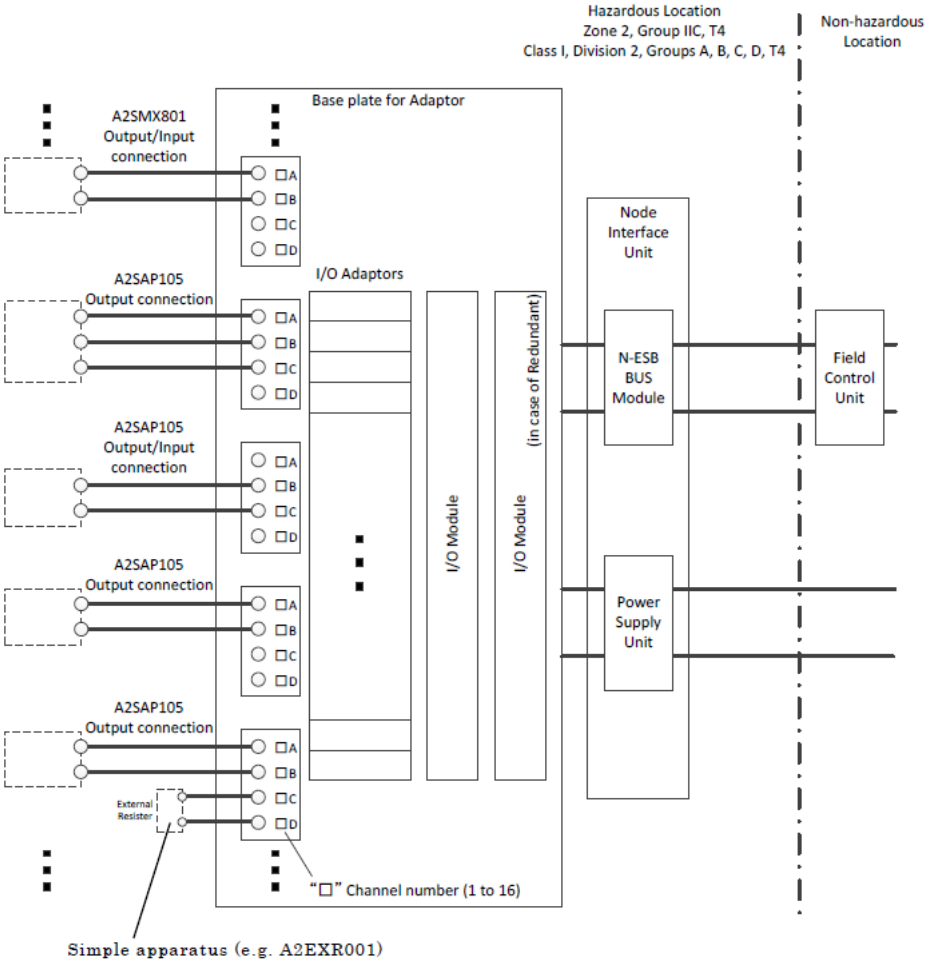

Rev.2: June 30, 2017 Doc. No.: NIE008-A101 P.6

Yokogawa Electric Corporation

F020113.ai

Model: CENTUM VP N-IO Date: April 28, 2015

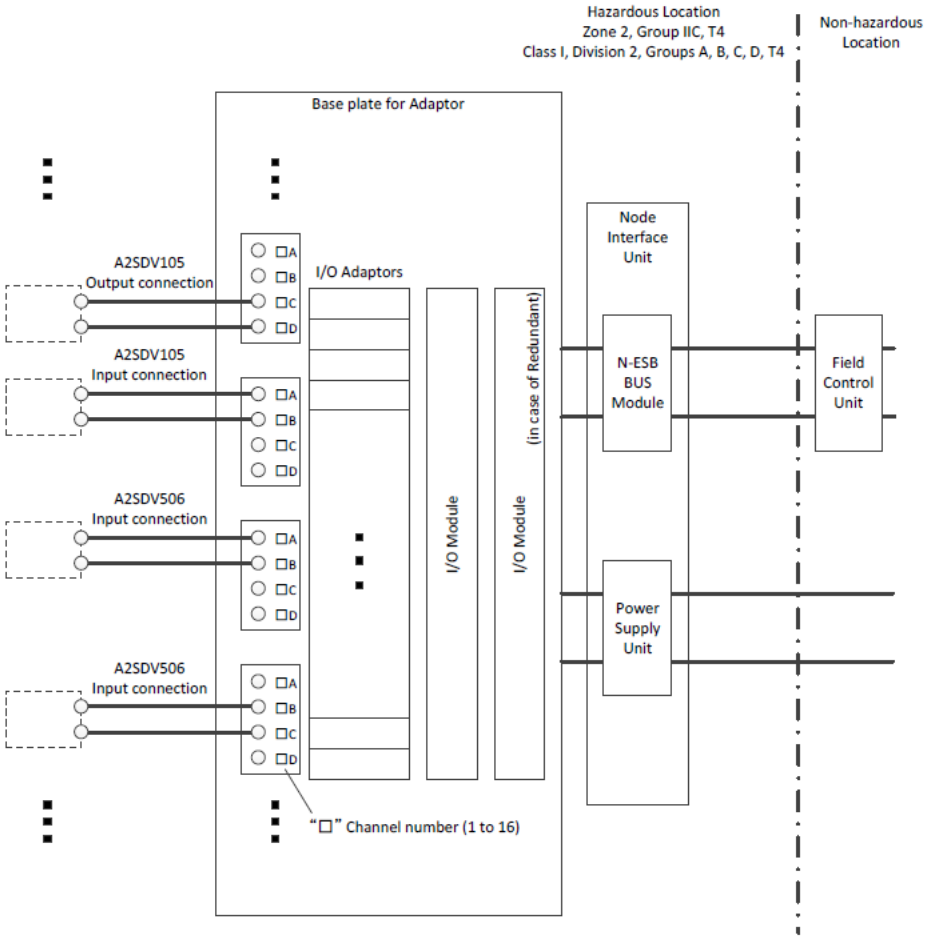

Rev.1: October 31, 2016 Doc. No.: NIE008-A101 P.7

Yokogawa Electric Corporation

F020114.ai

Model: CENTUM VP N-IO Date: June 30, 2017

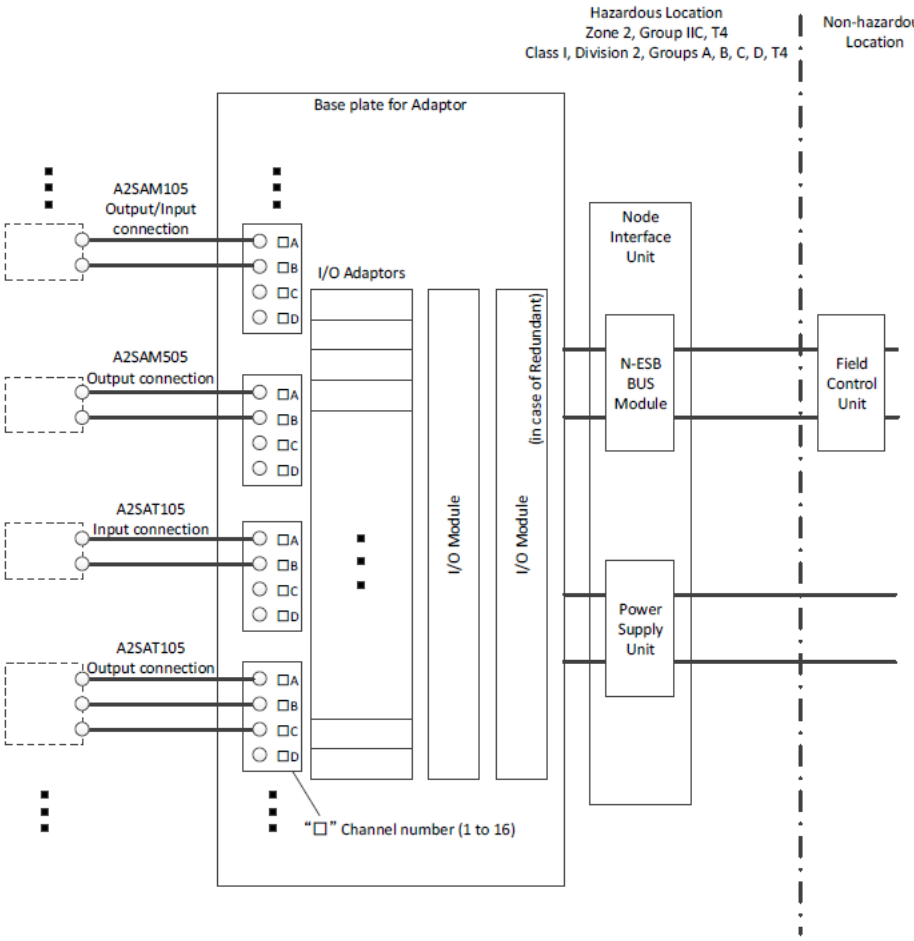

Rev. Doc. No.: NIE008-A101 P.7-1

Yokogawa Electric Corporation

F020115.ai

Model: CENTUM VP N-IO Date: July 12, 2019

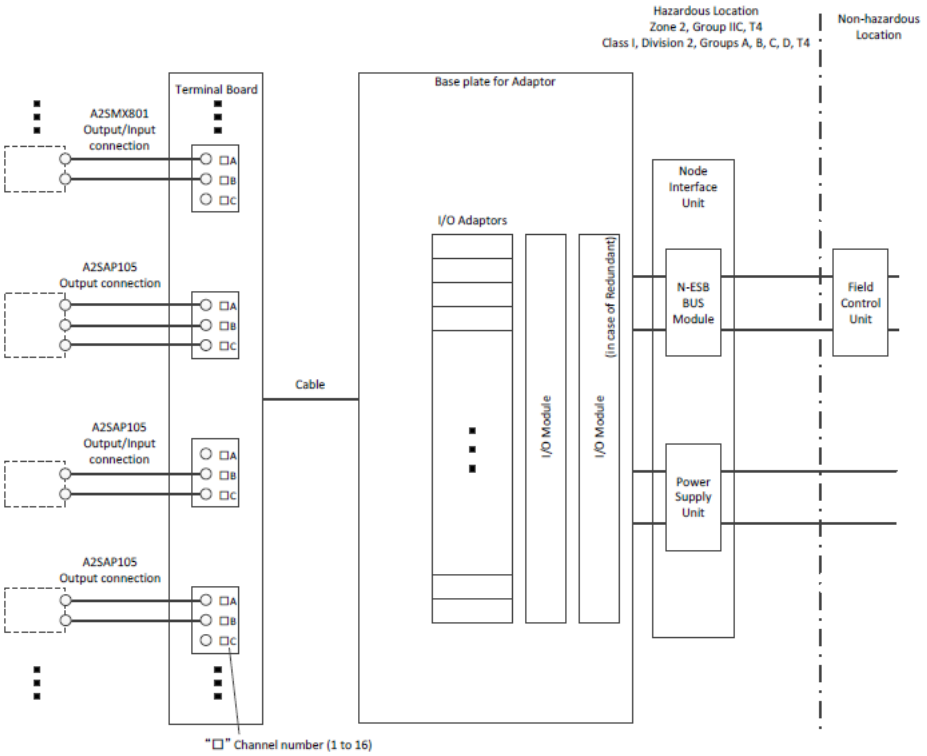

Rev. Doc. No.: NIE008-A101 P.7-2

Yokogawa Electric Corporation

F020116.ai

Model: CENTUM VP N-IO Date: July 12, 2019

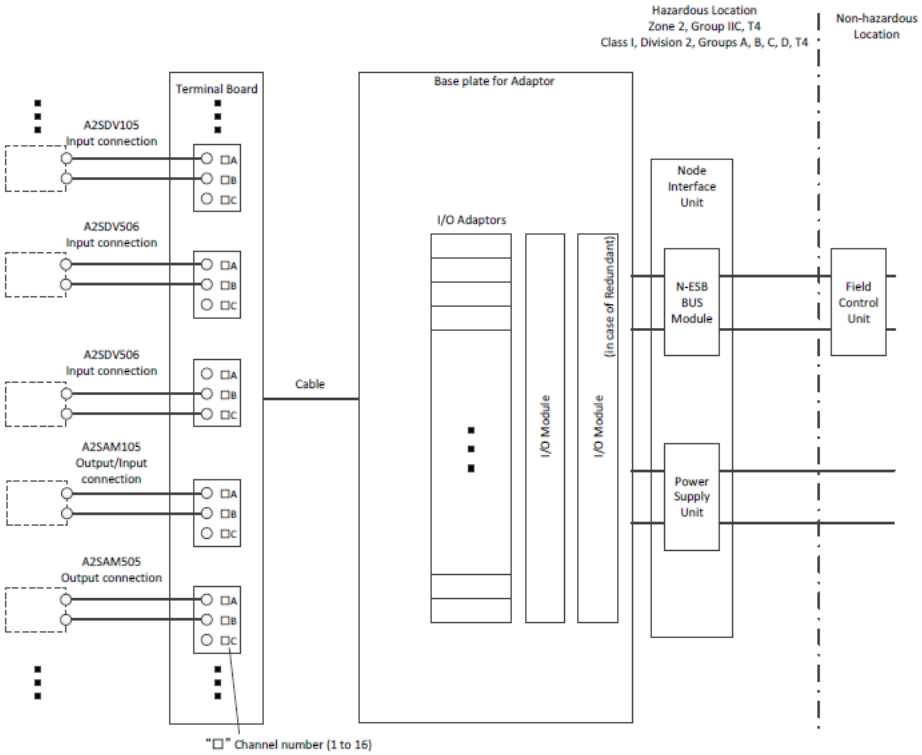

Rev. Doc. No.: NIE008-A101 P.7-3

Yokogawa Electric Corporation

F020117.ai

Model: CENTUM VP N-IO Date: April 28, 2015

Non-incendive field wiring parameters (Output parameter)

Model		Function	Voc(V)	Isc(mA)	Ca(μF)	La(mH)	Remark
A2MMM843	Redundant	Analog Input (Current Input)	24.0	26.0	0.05	0.66	2-wire transmitter input
	Single						
	Redundant	Analog Output (Current Output)	28.0	23.0	0.05	0.66	
	Single						
	Redundant	Digital Input	30.0	7.2	0.05	0.66	Dry contact input
	Single						
	Redundant	Digital Input	12.0	16.0	0.05	0.66	NAMUR Standard Compliant
	Single						
	Redundant	Digital Output	28.0	25.0	0.05	0.66	
	Single						
A2MDV843	Redundant	Digital Input	30.0	7.2	0.05	0.66	Dry contact input
	Single						
	Redundant	Digital Input	12.0	16.0	0.05	0.66	NAMUR Standard Compliant
	Single						
	Redundant	Digital Output	28.0	25.0	0.05	0.66	
	Single						
A2SAP105	Single	For all types of connections	26.4	40.0	0.19	0.15	
A2SDV105	Single	—	26.4	20.0	0.1	1.32	Dry contact input Between C-D terminal
A2SAM105	Single	Current Input	24.0	40.0	0.05	0.66	2-wire transmitter input
A2SAM505	Single	Current Output	25.5	23.0	0.05	0.66	
		Voltage Output	25.5	15.0	0.05	0.66	
A2SAT105	Single	RTD/POT Input	5.5	3.0	0.45	3.74	
		mV/TC Input					

Rev.3: June 30, 2017 Doc. No.: NIE008-A101 P.8

Yokogawa Electric Corporation

F020118.ai

Model: CENTUM VP N-IO Date: June 30, 2017

Non-incendive field wiring parameters (Input parameters)

Model		Function	Vmax (V)	Imax (mA)	Ci(μF)	Li(μH)	Remark
A2MMM843	Redundant	Analog Input (Current Input)	24.0	—	0.06	10	4-wire transmitter input
	Single						
	Redundant	Digital Output	30.0	100	0.06	10	Current sink
	Single						
A2MDV843	Redundant	Digital Output	30.0	100	0.06	10	Current sink
	Single						
A2SAP105	Single	—	26.4	—	0.01	10	Between B-C terminal
A2SDV105	Single	—	30.0	—	0.01	10	24V DC Voltage input
A2SDV506	Single	—	30.0	100	0.01	10	
A2SAM105	Single	Current Input Voltage Input	30.0	—	0.01	10	Current input (4-wire transmitter input)
A2SAT105	Single	mV/TC input	4.0	—	0.1	10	

Rev. Doc. No.: NIE008-A101 P.8-1

Yokogawa Electric Corporation

F020119.ai

Model: CENTUM VP N-IO Date: April 28, 2015

Specific condition of use:
- The equipment shall be installed in a lockable metal cabinet. The suitability of the installation shall be determined by the authority having jurisdiction.
- The Ambient Temperatures are as follows.

Model code	Ambient Temperature
A2NN30D-4a0b0cd1ef	When cd = 00 and e = 0, 1 0 to 60 °C When cd = 00 and e = 2, 3 −40 to 70 °C When cd = 01, 11, 21, 02, 12, 22, 10, 20 and e = 0, 1 0 to 60 °C When cd = 01, 11, 21, 02, 12, 22, 10, 20 and e = 2, 3 −40 to 70 °C (altitude ≤ 2000 m) When cd = 01, 11, 21, 02, 12, 22, 10, 20 and e = 2, 3 −40 to 60 °C (2000 m < altitude ≤ 3000 m)
A2PW503-S01a0b	When a = 0, 1 0 to 60 °C When a = 2, 3 −40 to 70 °C
A2PW504-S01a0b	When a = 0, 1 0 to 60 °C When a = 2, 3 −40 to 70 °C
A2EN501-Sab1c0d	When ab = 00 and c = 0, 1 0 to 60 °C When ab = 00 and c = 2, 3 −40 to 70 °C When ab = 01, 11, 21, 02, 12, 22, 10, 20 and c = 0, 1 0 to 60 °C When ab = 01, 11, 21, 02, 12, 22, 10, 20 and c = 2, 3 −40 to 70 °C (altitude ≤ 2000 m) When ab = 01, 11, 21, 02, 12, 22, 10, 20 and c = 2, 3 −40 to 60 °C (2000 m < altitude ≤ 3000 m)

Rev.1: July 12, 2019 Doc. No.: NIE008-A101 P.9

Yokogawa Electric Corporation

F020120.ai

Model: CENTUM VP N-IO Date: July 12, 2019

(Continued)

Model code	Ambient Temperature
A2MMM843-SS11a0	When a = 0, 1 0 to 60 °C When a = 2, 3 −40 to 70 °C (*1, 6)
A2MDV843-0S11a0	When a = 0, 1 0 to 60 °C When a = 2, 3 −40 to 70 °C (*6)
A2SAP105-S1a0	When a = 0, 1 0 to 60 °C When a = 2, 3 −40 to 70 °C (*2, 6)
A2SDV105-S1a0	When a = 0, 1 0 to 60 °C When a = 2, 3 −40 to 70 °C (*4, 6)
A2SDV505-S1a0	When a = 0, 1 0 to 60 °C When a = 2, 3 −40 to 70 °C (*4, 6)
A2SDV506-S1a0	When a = 0, 1 0 to 60 °C When a = 2, 3 −40 to 70 °C (*3, 6)
A2SMX801-S1ab	When a = 0, 1 0 to 60 °C When a = 2, 3 −40 to 70 °C (*4, 6)
A2SAM105-H1a0	When a = 0, 1 0 to 60 °C When a = 2, 3 −40 to 70 °C (*2, 6)
A2SAM505-H1a0	When a = 0, 1 0 to 60 °C When a = 2, 3 −40 to 70 °C (*2, 6)

Rev.1: October 7, 2019 Doc. No.: NIE008-A101 P.9-1

Yokogawa Electric Corporation

F020121.ai

Model: CENTUM VP N-IO Date: July 12, 2019

(Continued)

Model code	Ambient Temperature
A2SAT105-S1a0	When a = 0, 1 0 to 60 °C When a = 2, 3 −40 to 70 °C (*4, 6)
A2SMX802-S1a0	When a = 0, 1 0 to 60 °C When a = 2, 3 −40 to 70 °C (*4, 6)
A2BN3D-ab1cde	When c = 0, 1 0 to 60 °C When c = 2, 3 and, b = 0, 1, 2 −40 to 70 °C (*1) When c = 2, 3 and, b = 9 −40 to 70 °C (*1, 5)
A2BM4-1a0	When a = 0, 1 0 to 60 °C When a = 2, 3 −40 to 70 °C (*5)

(*1) If A2MMM843 and A2SDV506 are mounted on a base plate, and any of A2SAM105, A2SAM505, or A2SAP105 is also mounted on the same base plate, the maximum temperature is limited to 60 °C.
(*2) If the adaptor is mounted on the same base plate that A2SDV506 is mounted, the maximum temperature is limited to 60 °C.
(*3) If the adaptor and any of A2SAM105, A2SAM505, or A2SAP105 are mounted on the same base plate, the maximum temperature is limited to 60 °C.
(*4) If the adaptor and A2SDV506 are mounted a base plate, and any of A2SAM105, A2SAM505, or A2SAP105 is also mounted on the same base plate, the maximum temperature is limited to 60 °C.
(*5) The minimum temperature is limited to −20 °C for using AKB331 or AKB651 together.
(*6) If it is mounted on A2BN3D-x9120 or A2BN3D-x9130, the minimum temperature is limited to −20 °C for using AKB331 or AKB651 together.

Rev.1: October 7, 2019 Doc. No.: NIE008-A101 P.9-2

Yokogawa Electric Corporation

F020122.ai

Model: CENTUM VP N-IO Date: July 12, 2019

Notes:

1. No revision to this drawing without prior approval of FM.

2. In this control drawing, the term "installation" includes reconfiguration of the function of each module, which is carried out in maintenance process.

3. Installation must be in accordance with Canadian Electrical Code Part I (C22.1) and relevant local codes.

4. In the course of installation, the related documents of GS (General specifications), TI (Technical Information of Installation Guidance), and IM (User's Manuals) should be referred to and the instructions described in the documents should be observed.

5. Modules can be mounted also on an FM-approved Base Plates A2BN4D or A2BN5D. In such case, installation must be in accordance also with the control drawing of these Base Plates.

6. CENTUM VP IS SUITABLE FOR USE IN ZONE 2, GROUP IIC; CLASS 1, DIVISION 2, GROUPS A, B, C, and D; OR NON-HAZARDOUS LOCATIONS ONLY.

7. It must be observed during the installation that the venting slots of the devices are not blocked by cable parts, fixing accessories etc.

8. The doors of the cabinets must be closed when CENTUM VP is energized.

9. Nonincendive field wiring is permitted for the modules listed in tables of the Nonincendive field wiring parameters.

9.1 The Nonincendive field wiring circuit concept allows interconnection of nonincendive field wiring apparatus with associated nonincendive field wiring apparatus, using any of the wiring methods permitted for unclassified locations.

9.2 Field equipment or other equipment connected to CENTUM VP by Nonincendive field wiring must be FM approved.

9.3 The control drawing of field equipment or other equipment must be followed at the installation.

9.4 The following conditions must be met. See tables for the Nonincendive field wiring parameters of CENTUM VP.

$V_{max} \geq V_{oc}$ or V_t; $I_{max} \geq I_{sc}$ or I_t; $C_a \geq C_i + C_{cable}$; $L_a \geq L_i + L_{cable}$

9.5 For current controlled circuits, Imax of the nonincendive field wiring apparatus is not required and need not be aligned with parameter Isc or It of CENTUM VP or other associated nonincendive field wiring apparatus.

Rev. Doc. No.: NIE008-A101 P.9-3

Yokogawa Electric Corporation

F020123.ai

Model: CENTUM VP N-IO Date: April 28, 2015

10. WARNING – EXPLOSION HAZARD – SUBSTITUTION OF COMPONENTS MAY IMPAIR SUITABILITY FOR CLASS I, DIVISION 2.
AVERTISSEMENT – RISQUE D'EXPLOSION – LA SUBSTITUTION DE COMPOSANTS PEUT RENDRE CE MATÉRIEL INACCEPTABLE POUR LES EMPLACEMENTS DE CLASSE 1. DIVISION 2.

11. WARNING – EXPLOSION HAZARD – DO NOT DISCONNECT WHILE CIRCUIT IS LIVE UNLESS AREA IS KNOWN TO BE NON-HAZARDOUS.
AVERTISSEMENT – RISQUE D'EXPLOSION. NE PAS DÉBRANCHER TANT QUE LE CIRCUIT EST SOUS TENSION, À MOINS QU'IL NE S'AGISSE D'UN EMPLACEMENT NON DANGEREUX.

13. WARNING – EXPLOSION HAZARD – DO NOT REPLACE FUSES UNLESS POWER HAS BEEN SWITCHED OFF OR THE AREA IS KNOWN TO BE NON-HAZARDOUS.
AVERTISSEMENT – RISQUE D'EXPLOSION – COUPER LE COURANT OU S'ASSURER QUE L'EMPLACEMENT EST DÉSIGNÉ NON DANGEREUX AVANT DE REPLACER LE COUPE-CIRCUIT À FUSIBLES.

14. WARNING – EXPLOSION HAZARD – BATTERIES MUST ONLY BE CHANGED IN AN AREA KNOWN TO BE NON-HAZARDOUS.
AVERTISSEMENT – RISQUE D'EXPLOSION – AFIN D'ÉVITER TOUT RISQUE D'EXPLOSION, S'ASSURER QUE L'EMPLACEMENT EST DÉSIGNÉ NON DANGEREUX AVANT DE CHANGER LA BATTRIE.

Rev. Doc. No.: NIE008-A101 P.10

Yokogawa Electric Corporation

F020124.ai

Yokogawa Electric Corporation		Model		CENTUM VP N-IO field enclosure			
Title	Control drawing (US)						
No.	NFM036-A101	Page	1	Revision	1	Date	2020-04-10
Revised pages	2, 4						

Control Drawing (US)

Hazardous (Classified) Location
Class I, Division 2, Groups A, B, C, D, T4

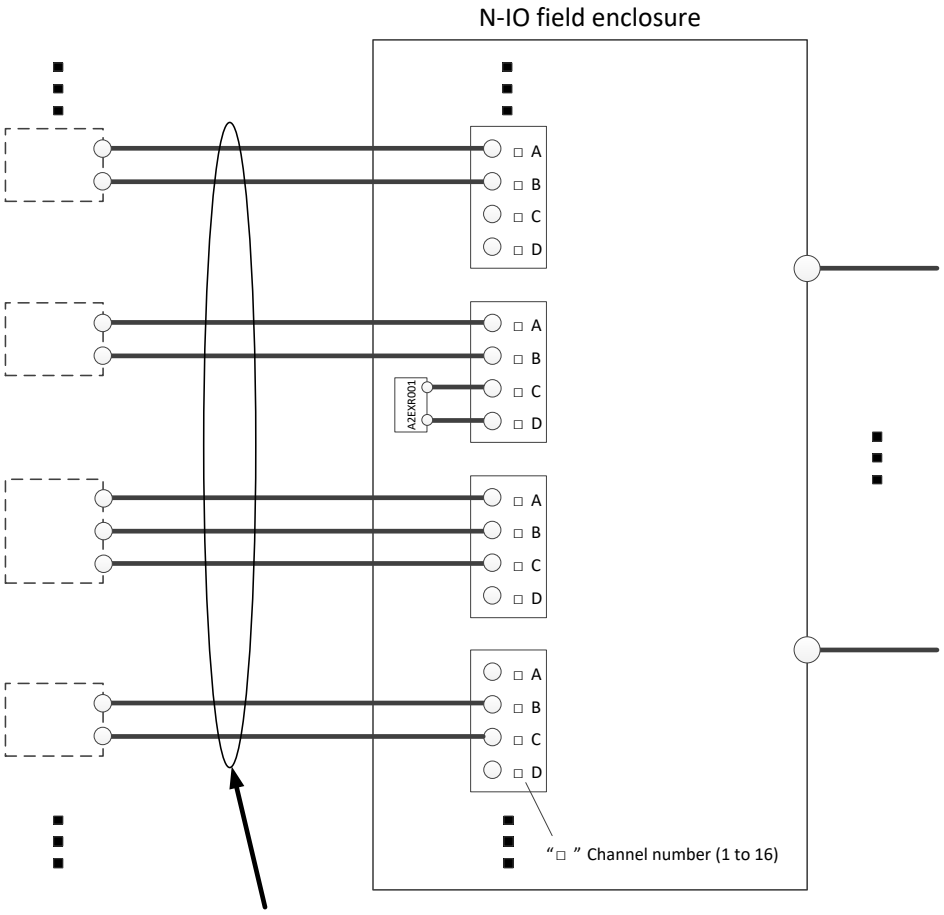

■ Terminal block for field wiring connection .
- There are four types of Nonincendive field wiring connection.
- For details, refer to " NIE008 - A101 ".

■ Nonincendive field wiring parameterds
For details, refer to " NIE008 - A101 ".

F020125.ai

Yokogawa Electric Corporation		Model		CENTUM VP N-IO field enclosure	
Title	Control drawing (US)				
No.	NFM036-A101	Page	2	Revision	1

Specific condition of use:
- A2NN60D shall be installed in A2CB60.
- Since Ta is not marked on the equipment, the control drawing NFM036-A101 shall be referred to for the ambient temperature range.
- Ambient temperature: −40 to +55 °C (outside the enclosure)

Notes:

1. No revision to this drawing without prior approval of FM.
2. In this control drawing, the term “installation” includes reconfiguration of the function of each module, which is carried out in maintenance process.
3. Installation must be in accordance with the National Electrical Code (NFPA 70) and relevant local codes.
4. In the course of installation, the related documents of GS (General specifications), TI (Technical Information of Installation Guidance), and IM (User’s Manuals) should be referred to and the instructions described in the documents should be observed.
5. THE EQUIPMENT IS SUITABLE FOR USE IN CLASS 1, DIVISION 2, GROUPS A, B, C, and D OR NONHAZARDOUS LOCATIONS ONLY.
6. When nonincendive field wiring is used as a wiring method, the installation must be in accordance with the control drawing NIE008-A101 (FM17US0026X).
7. The option code (/MDV1S, /MDV1D, /MMM1S and /MMM1D) indicates the default setting of I/O modules and I/O adaptors at the time of shipping from a factory. The pre-installed I/O modules and I/O adaptors are replaceable to separately prepared modules which are listed on FM17US0026X.
8. WARNING – SUBSTITUTION OF COMPONENTS MAY IMPAIR SUITABILITY FOR DIVISION 2.
9. WARNING – DO NOT OPEN THE ENCLOSURE WHEN AN EXPLOSIVE ATMOSPHERE IS PRESENT.
10. WARNING – EXPLOSION HAZARD. DO NOT DISCONNECT EQUIPMENT WHEN A FLAMMABLE OR COMBUSTIBLE ATMOSPHERE IS PRESENT.
11. WARNING – EXPLOSION HAZARD. DO NOT RESET CIRCUIT BREAKER UNLESS

F020126.ai

Yokogawa Electric Corporation		Model		CENTUM VP N-IO field enclosure	
Title	Control drawing (Canada)				
No.	NFM036-A101	Page	3	Revision	1

Hazardous Location
Zone 2, Group IIC, T4
Class I, Division 2, Groups A, B, C, D, T4

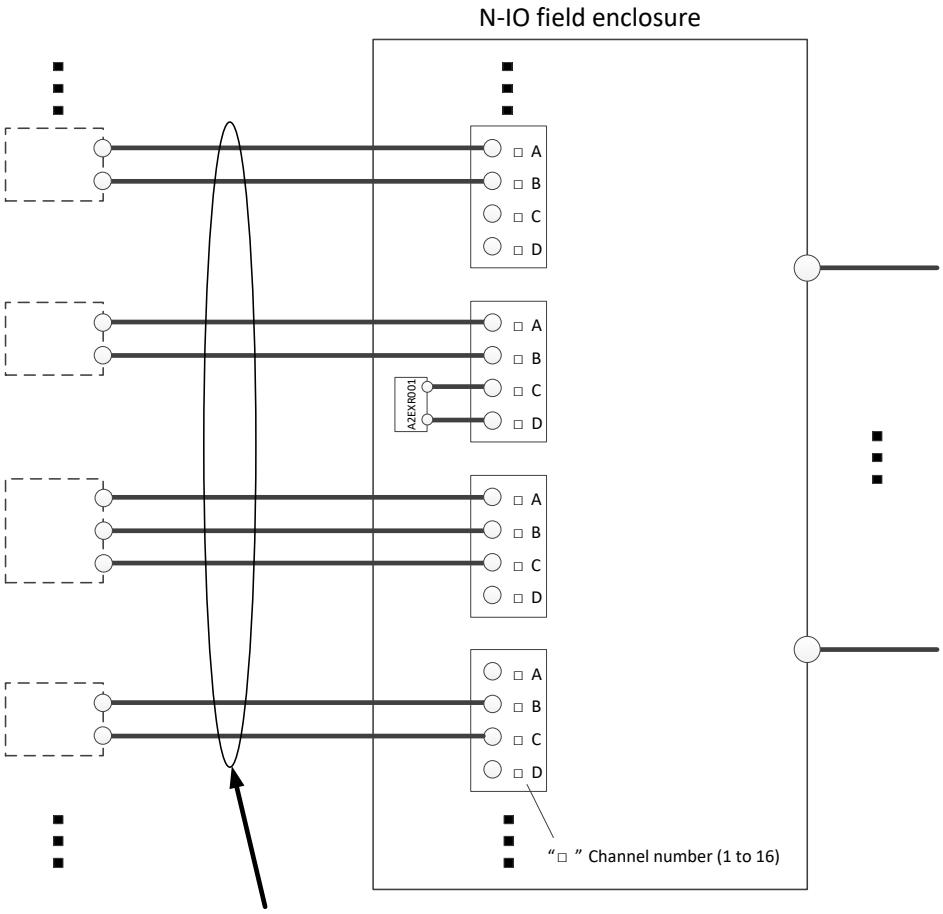

■ Terminal block for field wiring connection .
- There are four types of Nonincendive field wiring connection.
- For details, refer to " NIE008 - A101 ".

■ Nonincendive field wiring parameterds
For details, refer to " NIE008 - A101 ".

F020127.ai

Yokogawa Electric Corporation		Model		CENTUM VP N-IO field enclosure	
Title	Control drawing (Canada)				
No.	NFM036-A101	Page	4	Revision	1

Specific condition of use:
- A2NN60D shall be installed in A2CB60.
- Since Ta is not marked on the equipment, the control drawing NFM036-A101 shall be referred to for the ambient temperature range.
- Ambient temperature: −40 to +55 °C (outside the enclosure)

Notes:

1. No revision to this drawing without prior approval of FM.

2. In this control drawing, the term “installation” includes reconfiguration of the function of each module, which is carried out in maintenance process.

3. Installation must be in accordance with Canadian Electrical Code Part I (C22.1) and relevant local codes.

4. In the course of installation, the related documents of GS (General specifications), TI (Technical Information of Installation Guidance), and IM (User’s Manuals) should be referred to and the instructions described in the documents should be observed.

5. THE EQUIPMENT IS SUITABLE FOR USE IN ZONE 2, GROUP IIC; CLASS 1, DIVISION 2, GROUPS A, B, C, and D; OR NON-HAZARDOUS LOCATIONS ONLY.

6. When nonincendive field wiring is used as a wiring method, the installation must be in accordance with the control drawing NIE008-A101 (FM17CA0014X).

7. The option code (/MDV1S, /MDV1D, /MMM1S and /MMM1D) indicates the default setting of I/O modules and I/O adaptors at the time of shipping from a factory. The pre-installed I/O modules and I/O adaptors are replaceable to separately prepared modules which are listed on FM17CA0014X.

8. WARNING – EXPLOSION HAZARD – SUBSTITUTION OF COMPONENTS MAY IMPAIR SUITABILITY FOR CLASS I, DIVISION 2.
   AVERTISSEMENT – RISQUE D’EXPLOSION – LA SUBSTITUTION DE COMPOSANTS PEUT RENDRE CE MATÉRIEL INACCEPTABLE POUR LES EMPLACEMENTS DE CLASSE 1. DIVISION 2.

9. WARNING – DO NOT OPEN THE ENCLOSURE WHEN AN EXPLOSIVE ATMOSPHERE IS PRESENT.
   AVERTISSEMENT – NE PAS OUVRIR L’ENVELOPPE EN PRÉSENCE D’UNE ATMOSPHÈRE EXPLOSIVE.

10. WARNING – EXPLOSION HAZARD – DO NOT DISCONNECT WHILE CIRCUIT IS LIVE UNLESS AREA IS KNOWN TO BE NON-HAZARDOUS.
    AVERTISSEMENT – RISQUE D’EXPLOSION. NE PAS DÉBRANCHER TANT QUE LE CIRCUIT EST SOUS TENSION, À MOINS QU’IL NE S’AGISSE D’UN EMPLACEMENT NON DANGEREUX.

11. WARNING – EXPLOSION HAZARD. DO NOT RESET CIRCUIT BREAKER UNLESS POWER HAS BEEN REMOVED FROM THE EQUIPMENT OR THE AREA IS FREE OF IGNITIBLE CONCENTRATIONS.
    AVERTISSEMENT – RISQUE D’EXPLOSION. NE PAS RÉARMER LE DISJONCTEUR À MOINS QUE L’ALIMENTATION À L’APPAREILLAGE N’AIT ÉTÉ COUPÉE OU QUE L’EMPLACEMENT NE SOIT EXEMPT DE CONCENTRATIONS INFLAMMABLES.

F020128.ai

Appendix 3. FM NI/CSA NI Control Drawing for A2BN4D

Model: A2BN4D-* Date: May 26, 2016

Control Drawing

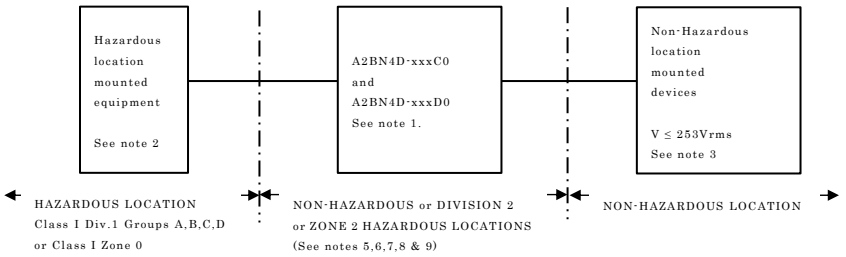

Note 1

The A2BN4D-xxxC0 and A2BN4D-xxxD0 Base Plate for Barrier may be fitted with up to 16 Intrinsically Safe barriers of the types defined in Table 1, and up to 2 I/O Modules of the type defined in Table 2.

Table 1

Barrier Type	Installation Drawing
MTL4514N	SCI-1076
MTL4521Y, MTL4521YL, MTL4523Y MTL4523YL	SCI-1077
MTL4541Y	SCI-1078
MTL4545YA	SCI-1079
MTL4545Y	SCI-1080
MTL4573Y	SCI-1081

Table 2

I/O Module Type	Installation Drawing
A2MMM843	NIE008-A101
A2MDV843	NIE008-A101

Note 2

Entity Concept parameters and suitable hazardous location equipment is defined by the IS barrier types fitted, details of which are defined in the Installation Drawings in Table 1 above.

Note 3

The Non-hazardous location (or Control Room) equipment must not generate or use more than 253Vrms.

Note 4

For guidance on installation see ANSI/ISA-RP12.06.01.

Note 5

When installed as Class I Division 2 equipment, the A2BN4D Base Plate for Barrier shall be mounted within a tool-secured enclosure which is capable of accepting one or more of the Class I Division 2 wiring methods per the National Electric Code(ANSI/NFPA 70) for the US or Canadian Electrical Code (C22.1) for Canada.

Note 6

When installed as Class I, Zone 2 equipment, the A2BN4D Base Plate for Barrier shall be mounted within a tool-secured enclosure which meets the requirements of IP54 and is capable of accepting one or more of the Class I, Zone 2 wiring methods specified in the National Electric Code (ANSI/NFPA 70) for the US or Canadian Electrical Code (C22.1) for Canada.

Rev.1: October 24, 2017 Doc. No.: NFM035-A100 P.1

Yokogawa Electric Corporation

F030001.ai

Model: A2BN4D-* Date: May 26, 2016

Note 7
Installations in the United States must comply with the National Electrical Code.

Note 8
Installations in Canada must comply with the Canadian Electrical Code.

Note 9
Warning: Equipment must be powered down before connecting or disconnecting when mounted in Division 2 or Zone 2.

Rev.1: October 24, 2017 Doc. No.: NFM035-A100 P.2

Yokogawa Electric Corporation

F030002.ai

Appendix 4. FM NI/CSA NI Control Drawing for A2BN5D

Model: A2BN5D-* Date: September 17, 2015

Control Drawing

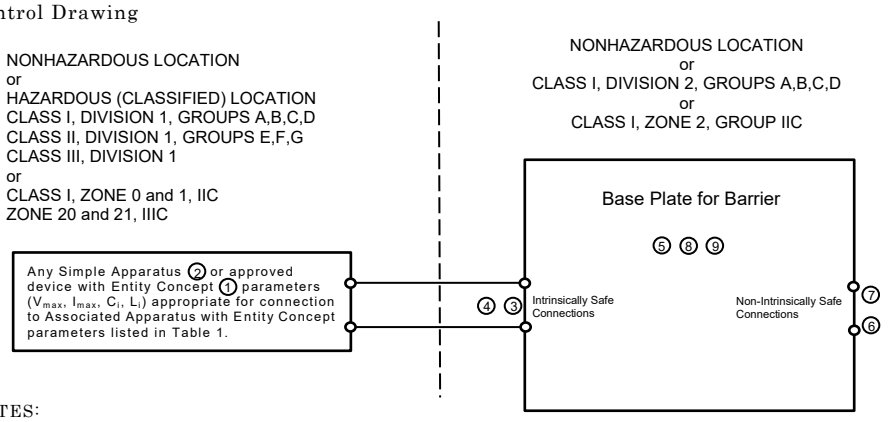

NOTES:

1. The Entity Concept allows interconnection of intrinsically safe apparatus with associated apparatus not specifically examined in combination as a system when the approved values of Voc (or Uo) and Isc (or Io) for the associated apparatus are less than or equal to Vmax(Ui) and Imax(Ii) for the intrinsically safe apparatus. Capacitance and inductance of the field wiring from the intrinsically safe equipment to the associated apparatus shall be calculated and must be included in the system calculations. Cable capacitance, Ccable, plus intrinsically safe equipment capacitance, Ci must be less than the marked capacitance, Ca (or Co), shown on any associated apparatus used. The same applies for inductance (Lcable, Li and La or Lo, respectively). Where the cable capacitance and inductance per foot are not known, the following values shall be used: Ccable = 60 pF/ft., Lcable = 0.2 µH/ft.
   The Entity Parameters of each channel depends on the barrier which is plug in the Base plate (see control drawing of the barrier).

2. This associated apparatus may also be connected to simple apparatus as defined in Article 504.2 and installed and temperature classified in accordance with Article 504.10(B) of the National Electrical Code (ANSI/NFPA 70), or other local codes, as applicable.

3. Where multiple circuits extend from the same piece of associated apparatus, they must be installed in separate cables or in one cable having suitable insulation. Refer to Article 504.30(B) of the National Electrical Code (ANSI/NFPA 70) and Instrument Society of America Recommended Practice ISA RP12.6 for installing intrinsically safe equipment.

4. Intrinsically safe circuits must be wired and separated in accordance with Article 504.20 of the National Electrical Code (ANSI/NFPA 70) or other local codes, as applicable.

5. Associated apparatus must be installed in an enclosure suitable for the application in accordance with the National Electrical Code (ANSI/NFPA 70) for installation in the United States, the Canadian Electrical Code for installations in Canada, or other local codes, as applicable.

6. The Base plates shall not be connected to any device which uses or generates internally any voltage in excess of the maximum voltage Um of the barriers which are plug in the Base plate (see Control drawing of the barrier) unless the device has been determined to adequately isolate the voltage from the Base plate.

7. Wiring methods must be in accordance with the National Electrical Code for installations in the United States, the Canadian Electrical Code for installations in Canada, or other local codes, as applicable.

Rev.

Doc. No.: IFM050-A100 P.1
Drawing: M. Ootsubo
Approved: D. Harada

Yokogawa Electric Corporation

F040101.ai

Model: A2BN5D-* Date: September 17, 2015

8 The Base plates are rated 'Nonincendive' for use in Class I, Division 2 or Zone 2 or non-hazardous locations. A temperature rating of T4 applies.
If the Base plates are intended to be mounted in a Division 2 location, they must be mounted in an enclosure with a minimum ingress protection of IP2X.
If the Base plates are intended to be mounted in a Zone 2 location, they must be mounted in an enclosure that is AEx certified (for US) or Ex certified (for Canada) with a minimum ingress protection of IP54 and installed in an area of not more than pollution degree 2.

9 Temperature range is -20 to +60°C.

WARNING - Substitution of components may impair intrinsic safety and suitability for use in Class I, Div. 2/Zone 2.
AVERTISSEMENT - La substitution de composants peut compromettre la sécurité intrinsèque et l'adéquation à une utilisation en Classe I, Div. 2/Zone 2.

WARNING - Do not disconnect the equipment when it is energized and an explosive atmosphere is present.
AVERTISSEMENT - Ne pas débrancher l'équipement lorsqu'il est sous tension et exposé à une atmosphère explosive.

WARNING - Do not remove or replace fuse when energized.
AVERTISSEMENT - Ne pas retirer ni remplacer de fusible sous tension

Rev.

Doc. No.: IFM050-A100 P.2
Drawing: M. Ootsubo
Approved: D. Harada

Yokogawa Electric Corporation

F040102.ai

Appendix 5. Lists of Type “n”, “ec” Compliant Product

Note: Regarding the latest conformity standard, refer to the GS 33J01A10-01EN “Integrated Production Control System CENTUM VP System Overview”.

Appendix 5.1 The List of ATEX Type “n”, “ec” Compliant Products

Table The List of ATEX Type “n”, “ec” Compliant Products (1/4)

Classifications	Type names	Products
Field control unit	AFV10S-S□14E1 AFV10S-S□14F1 (*1)	Field Control Unit (for Vnet/IP) (24 V DC power supply)
	AFV10D-S414E1 AFV10D-S414F1 (*1)	Duplexed Field Control Unit (for Vnet/IP) (24 V DC power supply duplication)
	AFV30S-□□14E□ AFV30S-□□14F□ (*1)	Field Control Unit (for Vnet/IP) (24 V DC power supply)
	AFV30D-□414E□ AFV30D-□414F□ (*1)	Duplexed Field Control Unit (for Vnet/IP) (24 V DC power supply duplication)
	A2FV50S-□□□41□□ (*1)	Field Control Unit (24 V DC power supply)
	A2FV50D-□□□41□□ (*1)	Duplexed Field Control Unit (24 V DC power supply)
Node unit	ANB10S-□4E ANB10S-□4F ANB10S-□4G	Node Unit for Single ESB Bus (24 V DC power supply)
	ANB10D-44E ANB10D-44F ANB10D-44G	Node Unit for Dual-Redundant ESB Bus (24 V DC power supply duplication)
	ANB11S-□4E ANB11S-□4F	Node Unit for Single ESB Bus with Optical Repeater (24 V DC power supply)
	ANB11D-□4E ANB11D-□4F	Node Unit for Dual-Redundant ESB Bus with Optical Repeater (24 V DC power supply duplication)
	ANR10S-□4E ANR10S-□4F	Node unit for ER bus single (24 V DC power supply)
	ANR10D-44E ANR10D-44F	Node unit for ER bus duplication (24 V DC power supply duplication)
	ANR11S-□4E ANR11S-□4F	Node Unit for Single ER Bus (24 V DC power supply)
	ANR11D-44E ANR11D-44F	Node Unit for Dual-Redundant ER Bus (24 V DC power supply duplication)
	A2NN30D-□4□□□□□1□	Node Interface Unit (24 V DC power supply)
	A2ZN3D	N-IO I/O Unit
	A2BN3D-□□1□□	Base Plate for Adaptor
	A2ZN4DC	N-IO I/O Unit
	A2BN4D-2□1□□	Base Plate for Barrier
	A2ZN5DC	N-IO I/O Unit
	A2BN5D-2□1□□	Base Plate for Barrier

Note: Only N-IO field enclosure complies with ATEX Increased safety “ec”.
Note: For type names without the basic specification code in the table above, any products with basic specification codes are Type “n” compliant products. Also any accessories for maintenance are Type “n” compliant products.
*1: AFV30S/D, AFV10S/D, AW810D, and A2FV50S/D requires L2 switch to connect to a network. For L2 switch, select and use one that can be installed at Zone 2 area and conforms to type “n”.

Table The List of ATEX Type “n”, “ec” Compliant Products (2/4)

Classifications	Type names	Products
N-IO field enclosure (*2)	A2ZN70D	N-IO field enclosure
	A2NN70D-□□R□□B□2□□□□□□□□□ (*3)	
	A2NN70D-□□R□□D□2□□□□□□□□□ (*3)	
	A2ZN60D	N-IO field enclosure base unit
	A2NN60D-□□R□□2□□□□ (*3)	
	A2CB60-B□2□□□□□□□□□ (*4)	Enclosure for A2NN60D
	A2CB60-D□2□□□□□□□□□ (*4)	
Unit	ANT10U-□4E ANT10U-□4F	Unit for Optical ESB Bus Repeater Module (24 V DC power supply)
Router	AW810D-A2□04E AW810D-A2□04F (*1)	Wide Area Communication Router
Processor module	CP451-E□	Processor module
	CP461-E□	Processor module
	CP471-1□	Processor module
Communication module	VI461-2E□	Communication module
Power supply module	PW444-E□	24 V DC power supply module
	PW484-E□	
	A2PW504-S□□1□	24 V DC power supply unit
Bus Interface module	SB401-E□	ESB bus interface slave module
	EB501-E□	ER bus interface slave module
	EB511-E□	ER bus interface slave module
	ANT502-E□	Optical ESB Bus Repeater Slave Module
	ANT512-E□	Optical ESB Bus Repeater Slave Module
	ANT522-E□	Optical ESB Bus Repeater Slave Module (for Multimode Fiber)
	A2EN402-S□□1□	N-ESB Bus Coupler Module
	A2EN404-S□□1□	N-ESB Bus Coupler Module
	A2EN501- S□□1□□	N-ESB Bus Module
I/O module	AAI141-□E□	Analog input module (4 to 20 mA, 16 points, non-insulation)
	AAI135-□E□	Analog input module (4 to 20 mA, 8 points, individual insulation)
	AAV141-SE□	Analog input module (1 to 5 V, 16 points, non-insulation)
	AAV142-SE□	Analog input module (-10 to +10 V, 16 points, non-insulation)
	AAB141-HE□	Analog input module (1 to 5 V / 4 to 20 mA, 16-channel, non-isolated)
	AAI841-□E□	Analog I/O module (4 to 20 mA, 8 points input/4 points output, non-insulation)
	AAB841-SE□	Analog I/O module (1 to 5 V input, 4 to 20 mA output, 8 points input/ 8 points output, non-insulation)
	AAB842-HE□	Analog I/O module (1 to 5 V / 4 to 20 mA input, 4 to 20 mA output, 8-channel input / 8-channel output, non-isolated)
	AAI835-□E□	Analog I/O module (4 to 20mA, 4 points input/4 points output, individual insulation)
	AAV542-SE□	Analog output module (-10 to +10V, 16 points, non-insulation)
	AAT141-SE□	Thermocouple/mV input module (16 points, whole insulation)
	AAR181-SE□	RTD input module (12 points, whole insulation)

Note: Only N-IO field enclosure complies with ATEX Increased safety “ec”.
Note: For type names without the basic specification code in the table above, any products with basic specification codes are Type “n” compliant products. Also any accessories for maintenance are Type “n” compliant products.
*2: A2NN70D Style S1, A2NN60D Style S1, and A2CB60 Style S1 cannot be installed in Zone 2 hazardous area.
*3: The N-IO field enclosure comply with ATEX Type “n”, “ec” as system models A2ZN60D and A2ZN70D.
*4: A2CB60 complies with ATEX Increased safety “ec” as system model A2ZN70D. A2CB60 does not comply with Type “n”.

Table The List of ATEX Type “n”, “ec” Compliant Products (3/4)

Classifications	Type names	Products
I/O module	AAT145-SE□	Thermocouple/mV input module (16 points, individual insulation)
	AAR145-SE□	RTD/slide rheostat input module (16 points, individual insulation)
	AAP135-SE□	Pulse input module (0 to 10 kHz, 8 points, individual insulation)
	AAI143-□E□	Analog input module (4 to 20 mA, 16 points, whole insulation)
	AAI543-□E□ AAI543-□F□	Analog output module (4 to 20 mA, 16 points, whole insulation)
	AAV144-SE□	Analog input module (-10 to +10V, 16 points, whole insulation)
	AAV544-SE□	Analog output module (-10 to +10V, 16 points, whole insulation)
	ADV157-SE□	Digital input module (32 points, for press-tightening terminal only)
	ADV151-□E□ ADV151-□F□	Digital input module (32 points, with pulse-count function)
	ADV161-PE□	Digital input module (64 points, with pulse-count function)
	ADV557-SE□	Digital output module (32 points, for press-tightening terminal only)
	ADV551-PE□ ADV551-PF□	Digital output module (32 points, with pulse width output function)
	ADV561-PE□	Digital output module (64 points, with pulse-count function)
	ALR111-SE□	RS-232C communication module (2-port, 1200 bps to 115.2 kbps)
	ALR121-SE□	RS-422/RS-485 serial communication module (2-port, 1200 bps to 115.2 kbps)
	ALE111-SE□	Ethernet communication module
	ALF111-SE□	Foundation Fieldbus (FF-H1) communication module
	A2MMM843-SS□1□□	Analog Digital I/O Module (16-channel, Isolated)
	A2MDV843-0S□1□□	Digital I/O Module (16-channel, Isolated)
I/O Adaptor	A2SMX801-S1□□	Pass-through I/O Signal Adaptor (Pass-through I/O Signal)
	A2SMX802-S1□□	Pass-through I/O Signal Adaptor (with field power output)
	A2SAM105-H1□□	Current Input/Voltage Input Adaptor
	A2SAM505-H1□□	Current Output/Voltage Output Adaptor
	A2SAP105-S1□□	Pulse Input Signal Adaptor (0 to 10 kHz)
	A2EXR001-S□□□1□□	Shunt Resistor Unit (For A2SAP105)
	A2SAT105-S1□□	mV/TC/RTD Input Adaptor
	A2SDV105-S1□□	Digital Input Adaptor (24 V DC Voltage Input, Dry Contact Input)
	A2SDV505-S1□□	Digital Output Adaptor (24 V DC, Current Source: 0.5 A)
	A2SDV506-S1□□	Relay Output Adaptor (24 V DC, Dry Contact Output: 0.5 A)
Terminal board	AEA3D-0E AEA3D-0F	Analog/single, duplicated terminal board (8 points x 4)
	AEA4D-0E AEA4D-0F	Analog/single, duplicated terminal board (16 points x 2, or 8 points x 2)
	A1BA4D-0E A1BA4D-0F	Terminal Board for Analog (16 points x 1, or 8 points x 1)
	AET4D-0E AET4D-0F	Thermocouple/single, duplicated terminal board (16 points x 2)
	A1BT4D-0E A1BT4D-0F	Terminal Board for Thermocouple (16 points x 1)
	AED5D-0E AED5D-0F	Digital/single, duplicated terminal board (32 points)
	A1BD5D-0E A1BD5D-0F	Terminal Board for Digital (32 points x 1)
	AEF9D-0E AEF9D-0F	Fieldbus single, duplicated terminal board

Note: Only N-IO field enclosure complies with ATEX Increased safety “ec”.
Note: For type names without the basic specification code in the table above, any products with basic specification codes are Type “n” compliant products. Also any accessories for maintenance are Type “n” compliant products.

Table The List of ATEX Type “n”, “ec” Compliant Products (4/4)

Classifications	Type names	Products
Terminal board	AER4D-0E AER4D-0F	RTD/single, duplicated terminal board
	A1BR4D-0E A1BR4D-0F	Terminal Board for RTD input (16 points x 1)
	A2BM4-1□0	Terminal board for analog digital I/O
Bus cable	YCB147-E YCB147-F	ER bus cable conversion adaptor
I/O module	EB401-E□	ER bus interface master module
	EB402-E□	ER bus interface master module
	EC401-E□	ESB bus coupler module
	EC402-E□	ESB bus coupler module
	ANT401-E□	Optical ESB Bus Repeater Master Module
	ANT411-E□	Optical ESB Bus Repeater Master Module
	ANT421-E□	Optical ESB Bus Repeater Master Module (for Multimode Fiber)
Distribution unit	AEP7D-4E AEP7D-4F	Primary distribution unit (for 24 V DC input)
	AEPV7D-4□E AEPV7D-4□F	Power Supply Bus Unit, Vertical Type
	AEP9D-4E AEP9D-4F	Secondary distribution unit

Note: Only N-IO field enclosure complies with ATEX Increased safety “ec”.
Note: For type names without the basic specification code in the table above, any products with basic specification codes are Type “n” compliant products. Also any accessories for maintenance are Type “n” compliant products.

Appendix 5.2 The List of IECEx Type “n”, “ec” Compliant Products

Table The List of IECEx Type “n”, “ec” Compliant Products (1/2)

Classifications	Type names	Products
Field control unit	A2FV50S-□□□41□□ (*1)	Field Control Unit (24 V DC power supply)
	A2FV50D-□□□41□□ (*1)	Duplexed Field Control Unit (24 V DC power supply)
Node unit	ANB10D-□4E ANB10D-□4F ANB10D-□4G	Node Unit for Dual-Redundant ESB Bus (24 V DC power supply duplication)
	ANB11D-B4E, -D4E ANB11D-B4F, D4F	Node Unit for Dual-Redundant ESB Bus with Optical Repeater (24 V DC power supply duplication)
	A2NN30D-□4□□□□□1□	Node Interface Unit (24 V DC power supply)
	A2BN3D-□□1□□	Base Plate for Adaptor
	A2BN4D-2□1□□	Base Plate for Barrier
	A2BN5D-2□1□□	Base Plate for Barrier
N-IO field enclosure (*2)	A2NN70D-□□R□□B□2□□□□□□□□	N-IO field enclosure
	A2NN70D-□□R□□D□2□□□□□□□□	
	A2NN60D-□□R□□2□□□□	N-IO field enclosure base unit
	A2CB60-B□2□□□□□□□□ (*3)	Enclosure for A2NN60D
	A2CB60-D□2□□□□□□□□ (*3)	
Unit	ANT10U-□4E ANT10U-□4F	Unit for Optical ESB Bus Repeater Module (24 V DC power supply)
Router	AW810D-□□□□4E AW810D-□□□□4F (*1)	Wide Area Communication Router
Processor module	CP461-E□	Processor module
	CP471-1□	Processor module
Communication module	VI461-□E□	Communication module
Power supply module	PW444-E□	24 V DC power supply module
	PW484-E□	24 V DC power supply module
	A2PW504-S□□1□	24 V DC power supply unit
Bus Interface module	SB401-E□	ESB bus interface slave module
	EC401-E□	ESB bus coupler module
	EC402-E□	ESB bus coupler module
	ANT401-EE, -EF	Optical ESB Bus Repeater Master Module
	ANT411-EE, -EF	Optical ESB Bus Repeater Master Module
	ANT421-E□	Optical ESB Bus Repeater Master Module (for Multimode Fiber)
	ANT502-EE, -EF	Optical ESB Bus Repeater Slave Module
	ANT512-EE, -EF	Optical ESB Bus Repeater Slave Module
	ANT522-E□	Optical ESB Bus Repeater Slave Module (for Multimode Fiber)
	A2EN402-S□□1□	N-ESB Bus Coupler Module
	A2EN404-S□□1□	N-ESB Bus Coupler Module
	A2EN501-S□□1□□	N-ESB Bus Module

Note: Any accessories for maintenance are Type “n” compliant products.
Note: Only N-IO field enclosure complies with IECEx Increased safety “ec”.
*1: A2FV50S, A2FV50D, and AW810D requires L2 switch to connect to a network. For L2 switch, select and use one that can be installed at Zone 2 area and conforms to Type “n”.
*2: A2NN70D Style S1, A2NN60D Style S1, and A2CB60 Style S1 cannot be installed in Zone 2 hazardous area.
*3: A2CB60 does not comply with Type “n”.

Table The List of IECEx Type “n”, “ec” Compliant Products (2/2)

Classifications	Type names	Products
I/O module	ALR111-□E□	RS-232C communication module
	ALR121-□E□	RS-422/RS-485 serial communication module
	ALE111-□E□	Ethernet communication module
	ALF111-□E□	Foundation Fieldbus (FF-H1) communication module
	A2MMM843-SS11□0	Analog Digital I/O Module (16-channel, Isolated)
	A2MDV843-0S11□0	Digital I/O Module (16-channel, Isolated)
I/O Adaptor	A2SMX801-S1□□	Pass-through I/O Signal Adaptor (Pass-through I/O Signal)
	A2SMX802-S1□□	Pass-through I/O Signal Adaptor (with field power output)
	A2SAM105-H1□□	Current Input/Voltage Input Adaptor
	A2SAM505-H1□□	Current Output/Voltage Output Adaptor
	A2SAP105-S1□□	Pulse Input Signal Adaptor (0 to 10 kHz)
	A2EXR001-S□□□1□□	Shunt Resistor Unit (For A2SAP105)
	A2SAT105-S1□□	mV/TC/RTD Input Adaptor
	A2SDV105-S1□□	Digital Input Adaptor (24 V DC Voltage Input, Dry Contact Input)
	A2SDV505-S1□□	Digital Output Adaptor (24 V DC, Current Source: 0.5 A)
	A2SDV506-S1□□	Relay Output Adaptor (24 V DC, Dry Contact Output: 0.5 A)
Terminal board	AEF9D-0E	Fieldbus single, duplicated terminal board
	AEF9D-0F	
	A2BM4-1□0	Terminal board for analog digital I/O
Distribution unit	AEPV7D-4□E	Power Supply Bus Unit, Vertical Type
	AEPV7D-4□F	

Note: Any accessories for maintenance are Type “n” compliant products.
Note: Only N-IO field enclosure complies with IECEx Increased safety “ec”.

Appendix 5.3 The List of ECAS-Ex Type “n” Compliant Products

Table The List of ECAS-Ex Type “n” Compliant Products (1/2)

Classifications	Type names	Products
Field control unit	A2FV50S-□□□41□□ (*1)	Field Control Unit (24 V DC power supply)
	A2FV50D-□□□41□□ (*1)	Duplexed Field Control Unit (24 V DC power supply)
Node unit	ANB10D-□4E ANB10D-□4F ANB10D-□4G	Node Unit for Dual-Redundant ESB Bus (24 V DC power supply duplication)
	ANB11D-B4E, -D4E ANB11D-B4F, D4F	Node Unit for Dual-Redundant ESB Bus with Optical Repeater (24 V DC power supply duplication)
	A2NN30D-□4□□□□□1□	Node Interface Unit (24 V DC power supply)
	A2BN3D-□□1□□	Base Plate for Adaptor
Unit	ANT10U-□4E ANT10U-□4F	Unit for Optical ESB Bus Repeater Module (24 V DC power supply)
Router	AW810D-□□□□4E AW810D-□□□□4F (*1)	Wide Area Communication Router
Processor module	CP461-E□	Processor module
	CP471-1□	Processor module
Communication module	VI461-□E□	Communication module
Power supply module	PW444-E□	24 V DC power supply module
	PW484-E□	24 V DC power supply module
	A2PW504-S□□1□	24 V DC power supply unit
Bus Interface module	SB401-E□	ESB bus interface slave module
	EC401-E□	ESB bus coupler module
	EC402-E□	ESB bus coupler module
	ANT401-EE, -EF	Optical ESB Bus Repeater Master Module
	ANT411-EE, -EF	Optical ESB Bus Repeater Master Module
	ANT421-E□	Optical ESB Bus Repeater Master Module (for Multimode Fiber)
	ANT502-EE, -EF	Optical ESB Bus Repeater Slave Module
	ANT512-EE, -EF	Optical ESB Bus Repeater Slave Module
	ANT522-E□	Optical ESB Bus Repeater Slave Module (for Multimode Fiber)
	A2EN402-S□□1□	N-ESB Bus Coupler Module
	A2EN404-S□□1□	N-ESB Bus Coupler Module
	A2EN501-S□□1□□	N-ESB Bus Module
I/O module	ALR111-□E□	RS-232C communication module
	ALR121-□E□	RS-422/RS-485 serial communication module
	ALE111-□E□	Ethernet communication module
	ALF111-□E□	Foundation Fieldbus (FF-H1) communication module
	A2MMM843-SS11□0	Analog Digital I/O Module (16-channel, Isolated)
	A2MDV843-0S11□0	Digital I/O Module (16-channel, Isolated)

Note: Any accessories for maintenance are Type “n” compliant products.
*1: A2FV50S, A2FV50D, and AW810D requires L2 switch to connect to a network. For L2 switch, select and use one that can be installed at Zone 2 area and conforms to Type “n”.

Table The List of ECAS-Ex Type “n” Compliant Products (2/2)

Classifications	Type names	Products
I/O Adaptor	A2SMX801-S1□□	Pass-through I/O Signal Adaptor (Pass-through I/O Signal)
	A2SMX802-S1□□	Pass-through I/O Signal Adaptor (with field power output)
	A2SAM105-H1□□	Current Input/Voltage Input Adaptor
	A2SAM505-H1□□	Current Output/Voltage Output Adaptor
	A2SAP105-S1□□	Pulse Input Signal Adaptor (0 to 10 kHz)
	A2EXR001-S□□□1□□	Shunt Resistor Unit (For A2SAP105)
	A2SAT105-S1□□	mV/TC/RTD Input Adaptor
	A2SDV105-S1□□	Digital Input Adaptor (24 V DC Voltage Input, Dry Contact Input)
	A2SDV505-S1□□	Digital Output Adaptor (24 V DC, Current Source: 0.5 A)
	A2SDV506-S1□□	Relay Output Adaptor (24 V DC, Dry Contact Output: 0.5 A)
Terminal board	AEF9D-0E	Fieldbus single, duplicated terminal board
	AEF9D-0F	
	A2BM4-1□0	Terminal board for analog digital I/O
Distribution unit	AEPV7D-4□E	Power Supply Bus Unit, Vertical Type
	AEPV7D-4□F	

Note: Any accessories for maintenance are Type “n” compliant products.

Appendix 6. Lists of Parameters of Base Plate for Barrier (A2BN5D)

Table List of Parameters (ATEX) of Base Plate for Barrier (A2BN5D)

Modules	Uo (V)	Io (mA)	Po (mW)	Ui (V)	Co (nF)	Lo (mH)	Remarks
A2BN5D	30	—	—	30	—	—	(*1)

Table List of Parameters (IECEx) of Base Plate for Barrier (A2BN5D)

Modules	Uo (V)	Io (mA)	Po (mW)	Ui (V)	Co (nF)	Lo (mH)	Remarks
A2BN5D	30	—	—	30	—	—	(*1)

*1: The used P+F's I.S. barriers determine the ultimate output parameters of the channel. Please refer to P+F's instruction manual for the parameter of P+F's I.S. barriers.

Revision Information

- Title: Explosion Protection
- Manual No.: TI 33Q01J30-01E

March 2004/1st Edition
Newly published

Apr. 2007/2nd Edition
1.2 Explosion Protection Standards
Revised description of Type “n” standard number in “Table Explosion Protection Standards”
2.1 Explosion Protection Standards that CENTUM has Acquired
Non-Icendive of “Table Explosion Protection Standards that CENTUM Complies” is changed to CSA Non-Icendive.
Added FM Non-Icendive of “Table Explosion Protection Standards that CENTUM Complies”
Revised description of Type “n” standard number in “Table Explosion Protection Standards that CENTUM Complies”
3.1.1 CSA NI (CSA Non-Incendive)
NI is changed to CSA NI.
Revised description of “Signal Wiring”
3.1.2 FN NI (FM Non-Incendive)
Added “FM Non-Incendive”
3.2 Type “n”
Revised description of Type “n”
4.2 Intrinsic Safety Instrumentation Using Barriers
Deleted “Concrete Examples of Connections between CS 3000 System and Barriers”
5.1.1 Lists of CSA NI Compliant Products and CSA NI Parameters
NI is changed to CSA NI.
Revised description of “Lists of CSA NI Compliant Products and CSA NI Parameters”
5.1.2 Lists of FM NI Compliant Products and FM NI Parameters
Added “Lists of FM NI Compliant Products and FM NI Parameters”
5.2 List of Type “n” Compliant Product and the Parameters of Type “n”
Revised description of “List of Type “n” Compliant Product and the Parameters of Type “n””

June 2008/3rd Edition
CENTUM CS 3000 and CS 3000 changed to CENTUM

1.4 Symbols That Indicate Specifications of Explosion Protection
Deleted “CENELEC acceptable product EEx”
2.1 Explosion Protection Standards that CENTUM has Acquired
“Table Explosion Protection Standards that CENTUM Complies”
Revised Conformed standard number
3.1.1 CSA NI (CSA Non-Incendive)
Approved Types and Standards
Revised The CSA Standard No.
3.2 Type “n”
Revised Collected Standards
Appendix 1.1 Lists of CSA NI Compliant Products and CSA NI Parameters
Table FIO Parameters (The Load Devices)
Revised to *3 and Remarks
Appendix 2 List of Type “n” Compliant Product and the Parameters of Type “n”
Table FIO Parameters (the Load Devices)
Revised to *3 and Remarks

Apr. 2010/4th Edition
2. CENTUM and Explosion Protection Instrumentation
2.1 Explosion Protection Standards that CENTUM has Acquired
Revised description of “Table Explosion Protection Standards that CENTUM Complies”
2.3 Overview of Connecting CENTUM to the Devices Installed in a Hazardous Area
Added “Overview of Connecting a Module with Built-in Barrier (Compliant with CENELEC Standard)”
Added “Overview of Connecting a Module with Built-in Barrier (Compliant with FM Standard)”
4. Intrinsic Safety Explosion Protection Instrumentation
4.1 Intrinsic Safety Explosion Protection Instrumentation Using Module with Built-in Barrier
Added “4.1.1 Intrinsic Safety Explosion Protection of CENELEC Standard”
Added “4.1.2 Intrinsic Safety Explosion Protection of FM Standard”
Appendix 3. List of Parameters of Modules with Built-in Barrier
Added “Table List of Parameters (FM) of Modules with Built-in Barrier”
Added “Appendix 4. Installation of I/O Modules with Built-in Barrier in accordance with FM Approval.”

Oct. 2010/5th Edition
Appendix 1.1 Lists of CSA NI Compliant Products and CSA NI Parameters
The List of CSA NI Compliant Products
Table The List of CSA NI Compliant Products <for FIO> [AAB141 and AAB842 are added.]
Parameters of CSA NI Compliant Equipments
Table FIO Parameters (The Source Devices) [AAB842 is added.]
Table FIO Parameters (The Load Devices) [AAB141 and AAB842 are added.]
Appendix 2. Lists of Type “n” Compliant Product and the Parameters of Type “n”
The List of Type “n” Compliant Products [AAB141 and AAB842 are added.]
Parameters of Type “n” Compliant Equipments
Table FIO Parameters (The Source Devices) [AAB842 is added.]
Table FIO Parameters (The Load Devices) [AAB141 and AAB842 are added.]

Dec. 2010/6th Edition
Appendix 1.1 Parameters of CSA NI Compliant Equipments
Revised Li for AAT141 (Single) in Table FIO Parameters (The Load Devices)
Appendix 2. Parameters of Type "n" Compliant Equipments
Revised Li for AAT141 (Single) in Table FIO Parameters (The Load Devices)

Jan. 2012/7th Edition
2. CENTUM and Explosion Protection Instrumentation
2.1 Explosion Protection Standards that CENTUM has Acquired
Revised description of “Table Explosion Protection Standards that CENTUM Complies”
Appendix 1.1 Lists of CSA NI Compliant Products and CSA NI Parameters
Parameters of CSA NI Compliant Equipments
Table FIO Parameters (The Source Devices) [Style codes (S1 and S2) of the existing AAI135 and AAI835 are added. AAI135 Style S3 and AAI835 Style S3 are added.]

June 2012/8th Edition
2. CENTUM and Explosion Protection Instrumentation
Directly Connected Node is changed into ESB Bus Node
Remote Node is changed into ER Bus Node
2.1 Explosion Protection Standards that CENTUM has Acquired
Revised description of Type “n” standard number in “Table Explosion Protection Standards that CENTUM Complies”
2.3 Overview of Connecting CENTUM to the Devices Installed in a Hazardous Area
Figure revised
3. Explosion Protection Instrumentation in Zone 2/Division 2
Directly Connected Node is changed into ESB Bus Node Unit
Remote Node is changed into ER Bus Node Unit
3.1 Non-Incendive
Revised standards
Figure revised
Revised precautions
3.2 Type “n”
Revised Collected Standards
Figure revised
Revised precautions

4. Intrinsic Safety Explosion Protection Instrumentation
Local Node is changed into ESB Bus Node Unit
Remote Node is changed into ER Bus Node Unit
Example of a Connection
Revised to *1 and Remarks
Appendix 1.1 Lists of CSA NI Compliant Product and CSA NI Parameters
The List of CSA NI Compliant Products
Table The List of CSA NI Compliant Products [ANB10S-□1□, ANB10S-□4□, ANB10D-□1□, ANB10D-□4□, ANB11S-□1□, ANB11S-□4□, ANB11D-□1□, ANB11D-□4□, ANT10U-□1□, ANT10U-□4□, CP461, ANT502, ANT512, ANT401, ANT411, AEPV7D-1□□, AEPV7D-4□□ and YCB301 are added.]
Revised precautions
Appendix 1.2 Lists of FM NI Compliant Product and FM NI Parameters
The List of FM NI Compliant Products
Table The List of FM NI Compliant Products [AFV30S,AFV30D, ANB11S, ANB11D, ANT10U, CP461, ANT502, ANT512, EC402, ANT401, ANT411 and AEPV7D-4□□ are added.]
Revised to *2 and Remarks
Parameters of Type “n” Compliant Equipments
Table FIO Parameters (The Source Devices) [AFV30S, AFV30D, CP461, ANT502, ANT512, EC402, ANT401, ANT411 and AEPV7D are added.]
Table FIO Parameters (The Load Devices) [AFV30S, AFV30D, CP461, ANT502, ANT512, EC402, ANT401, ANT411 and AEPV7D are added.]
Revised precautions
Appendix 2. Lists of Type “n” Compliant Product and the Parameters of Type “n”
The List of Type “n” Compliant Products
Table The List of Type “n” Compliant Products [AFV30S-S□14□1, AFV30D-S□14□1, ANB11S-□4□, ANB11D-□4□, ANT10U-□4□, CP461, ANT502, ANT512, EC402, ANT401, ANT411 and AEPV7D-4□□ are added.]
Revised to *2 and Remarks
Parameters of Type “n” Compliant Equipments
Table FIO Parameters (The Source Devices) [AFV30S, AFV30D, CP461, ANT502, ANT512, EC402, ANT401, ANT411 and AEPV7D-4□□ are added.]
Table FIO Parameters (The Load Devices) [AFV30S, AFV30D, CP461, ANT502, ANT512, EC402, ANT401, ANT411 and AEPV7D-4□□ are added.]
Revised precautions
Appendix3. Lists of Parameters of Modules with Built-in Barrier
Revised description of “Table List of Parameters (CENELEC) of Modules with Built-in Barrier”
Revised description of “Table List of Parameters (FM) of Modules with Built-in Barrier”
Revised parameters
Appendix 4. Installation of I/O Modules with Built-in Barrier in accordance with FM Approval
Table 1-Entity Parameters
Revised note

Sep. 2012/9th Edition
2.1 Explosion Protection Standards that CENTUM has Acquired
Revised description of “Table Explosion Protection Standards that CENTUM Complies”
4. Intrinsic Safety Explosion Protection Instrumentation
Example of a Connection
Revised to Remarks
Figure revised
Appendix 4. Installation of I/O Modules with Built-in Barrier in accordance with FM Approval
Table 1-Entity Parameters
Revised note

Apr. 2013/10th Edition
1.2 Explosion Protection Standards Table Explosion Protection Standards [Revised descriptive texts]
1.3 Classification of Explosion Protection Equipment
Revised descriptive text (4)
[Added about ic equipment]
Table Classification of Hazardous Area
[Intrinsic safety (ic) is added.]

1.4 Symbols That Indicate Specifications of Explosion Protection
Europe, Australia, IEC
[Revised descripteve texts]
2.1 Explosion Protection Standards that CENTUM has Acquired
Table Explosion Protection Standards that CENTUM Complies
[Revised “Conformed standard number”]
2.2 Explosion Protection Construction that I/O Devices of CENTUM Comply
[Revised descriptive text and figure]
2.3 Overview of Connecting CENTUM to the Devices Installed in a Hazardous Area
[Revised descriptive texts and figures]
3.1.1 CSA NI (CSA Non-Incendive)
Approved Types and Standards
[Revised the writing style]
3.1.2 FM NI (FM Non-Incendive)
Complied Standards
[Revised the writing style]
Device Installation
[Revised descriptive texts]
3.2 Type “n”
Revised descriptive texts and writing style of complied standards
Type “n” Approved Products and Their Configuration Example
[Revised figures]
Device Installation, Maintenance, Wiring, and Signal Wiring
[Revised descriptive texts]
Display of Parameters of the Type “n” Devices, and How to Compare Parameters
[Deleted all]
Connecting ESB Bus Node Unit and a Device Installed in Zone 2
[Revised descriptive texts and figures]
Installing ER Bus Node Unit in Zone 2 (Wiring by ER Bus)
[Revised descriptive texts and figures]
Installing ER Bus Node Unit in Zone 2 (Wiring by Optical cable for ER Bus)
[Revised descriptive texts and figures]
Installing Optical ESB Bus Node Unit in Zone 2 (Wiring by Optical cable for Optical ESB Bus)
[Revised descriptive texts and figures]
Installing a FCS or ESB Bus Node Unit in Zone 2
[Revised descriptive texts and figures]
4.1.1 Intrinsic Safety Explosion Protection of CENELEC Standard
Wiring of Intrinsic Safety Explosion Protection
[Revised document number]
Connect ESB Bus Node Unit to Equipment of Zone 0/1/2 Setting
[Revised document number]
Set ER Bus Node Unit and Module with Built-in Barrier in Zone 2
[Revised document number]
4.1.2 Intrinsic Safety Explosion Protection of FM Standard
Connect ESB Bus Node Unit to Equipment of Division 1/2 Setting
[Revised descriptive texts]
Set ER Bus Node Unit and Module with Built-in Barrier in Division 2
[Revised descriptive texts]
Set Optical ESB Bus Node Unit and Module with Built-in Barrier in Division 2
[Revised descriptive texts]
Appendix 1.1 Lists of CSA NI Compliant Products and CSA NI Parameters
Table The List of CSA NI Compliant Products <for FIO>
[Revised Type names]
Table FIO Parameters (The Source Devices)
[Revised Module name]
Table FIO Parameters (The Load Devices)
[Revised Module name]

Appendix 1.2 Lists of FM NI Compliant Products and FM NI Parameters
Table The List of FM NI Compliant Products
[Revised Type names]
Table FIO Parameters (The Source Devices)
[Revised Module name]
Table FIO Parameters (The Load Devices)
[Revised Module name]
Appendix 2. Lists of Type “n” Compliant Product and the Parameters of Type “n”
[Revised title]
Table The List of Type “n” Compliant Products
[Revised Type names]
Parameters of Type “n” Compliant Equipments
[Deleted all]
Table 1-Entity Parameters
[Revised descriptive texts]

Sep. 2013/11th Edition
3.1.1 CSA NI(CSA Non-Incendive)
Installing ER Bus Node Unit in Division 2
[Revised model names]
3.2 Type "n"
Complied Standards
[Revised descriptive texts]
4.2 Intrinsic Safety Explosion Protection Instrumentation Using Barriers
Example of Connection at the Barrier in Use (Connection Using Marshalling Panel)
[Revised figures]
Appendix 1. List of NI Compliant Products and NI parameters
Table The List of CSA NI Compliant Products <for FIO>
[Revised type names]
Table FIO Parameters (The Source Devices)
[Revised Module names]
Table FIO Parameters (The Load Devices)
[Revised Module names]
Appendix 1.2 Lists of FM NI Compliant Products and FM NI Parameters
Table The List of FM NI Compliant Products
[Revised type names]
Table FIO Parameters (The Source Devices)
[Revised Module names]
Table FIO Parameters (The Load Devices)
[Revised Module names]
Appendix 2. Lists of Type "n" Compliant Product
Table The List of Type "n" Compliant Products
[Deleted ADR541, ATC4S, and AKB334]

July 2014/12th Edition
1.4 Symbols that Indicate Specifications of Explosion Protection
Europe, Australia, IEC
[Revised descriptive texts]
2.1 Explosion Protection Standards that CENTUM has Acquired
Table Explosion Protection Standards that CENTUM Complies
[Revised descriptive texts]
3.1.2 FM NI (FM Non-Incendive)
Complied Standards
[Revised descriptive texts]
3.2 Type “n”
Complied Standards
[Revised descriptive texts]
4.1.2 Intrinsic Safety Explosion Protection of FM Standard
Explosion-proof Specifications and Complied Standard
Complied Standards
[Revised descriptive texts]

Appendix 1.2 Lists of FM NI Compliant Products and FM NI Parameters
Table The List of FM NI Compliant Products
[AW810D, VI461, and PW441/442/444 are added]
Table FIO Parameters (The Source Devices)
[AW810D and VI461 are added]
Table FIO Parameters (The Load Devices)
[AW810D, VI461, and PW441/442/444 are added]
Appendix 2. Lists of Type “n” Compliant Product
Table The List of Type “n” Compliant Products
[AW810D, VI461, and PW444 are added]

Oct. 2014/13th Edition
4.1.2 Intrinsic Safety Explosion Protection of FM Standard
Connect ESB Bus Node Unit to Equipment of Division 1/2 Setting
[Revised descriptive texts]
Set ER Bus Node Unit and Module with Built-in Barrier in Division 2
[Revised descriptive texts]
Set Optical ESB Bus Node Unit and Module with Built-in Barrier in Division 2
[Revised descriptive texts]
Appendix 1.1 Lists of CSA NI Compliant Products and CSA NI Parameters
Table The List of CSA NI Compliant Products <for FIO>
[Added ANT421 and ANT522]
Table FIO Parameters (The Source Devices)
[Added ANT421 and ANT522]
Table FIO Parameters (The Load Devices)
[Added ANT421 and ANT522]
Appendix 1.2 Lists of FM NI Compliant Products and FM NI Parameters
Table The List of FM NI Compliant Products
[Added ANT421 and ANT522]
Table FIO Parameters (The Source Devices)
[Added ANT421 and ANT522]
Table FIO Parameters (The Load Devices)
[Added ANT421 and ANT522]
Appendix 2. Lists of Type “n” Compliant Product
Table The List of Type “n” Compliant Products
[Added ANT421 and ANT522]
Appendix 4. Installation of I/O Modules with Built-in Barrier in accordance with FM Approval
Table 1-Entity Parameters
[Revised descriptive texts]

Feb. 2015/14th Edition
3.1.1 CSA NI (CSA Non-Incendive)
Power Supply wiring
[A1BD5D is added]
Signal Wiring
[A1BD5D is added]
Instruction on Contact Input Mode Wiring
[A1BD5D is added]
Instruction on Voltage Input Mode Wiring
[A1BD5D is added]
3.1.2 FM NI (FM Non-Incendive)
Power Supply Wiring
[A1BD5D is added]
Signal Wiring
[A1BD5D is added]
Instruction on Contact Input Mode Wiring
[A1BD5D is added]
Instruction on Voltage Input Mode Wiring
[A1BD5D is added]
3.2 Tpe "n"
Complied Standards
[A1BD5D is added]

Instruction on Contact Input Mode Wiring
[A1BD5D is added]
Instruction on Voltage Input Mode Wiring
[A1BD5D is added]
Appendix 1.1 Lists of CSA NI Compliant Products and CSA NI Parameters
Table The List of CSA NI Compliant Products <for FIO>
[A1BD5D, A1BA4D, A1BR4D, an A1BT4D are added]
Table FIO Parameters (The Load Devices)
[A1BD5D is added]
Appendix 1.2 Lists of FM NI Compliant Products and FM NI Parameters
The List of FM NI Compliant Products
Table The List of FM NI Compliant Products
[A1BD5D, A1BA4D, A1BR4D, an A1BT4D are added]
Parameters of FM NI Compliant Equipments
Table FIO Parameters (The Load Devices)
[A1BD5D is added]
Appendix 2 Lists of Type "n" Compliant Products
The List of Type "n" Compliant Products
Table The List of Type "n" Compliant Products <for FIO>
[A1BD5D, A1BA4D, A1BR4D, an A1BT4D are added]

Mar. 2015/15th Edition
Introduction [Revised descriptive texts]
Safety Precautions
Safety, Protection, and Modification of the Product [Added a symbol]
1.2 Explosion Protection Standard in Each Country [Deleted]
ATEX Directive [Exchanged CENELEC to ATEX]
1.3 Classification of Explosion Protection Equipment
Table Classification of Hazardous Area [Changed the classification]
Classification of Explosive Gas [Exchanged CENELEC to ATEX]
2.1 Explosion Protection Standards that CENTUM has Acquired
Table Explosion Protection Standards that CENTUM Complies
[Revised Conformed standard number]
2.2 Explosion Protection Construction that I/O Devices of CENTUM Comply
[Added note for safety barrier]
2.3 Overview of Connecting CENTUM to the Devices Installed in a Hazardous Area
Overview of Connecting a Module with Built-in Barrier (Equipment Compliant with Intrinsic Safety Explosion Protection) with Devices [Exchanged CENELEC to ATEX]
Figure Connection of a Module with Built-in Barrier (Compliant with CENELEC Standard) (1)
[Deleted Type “n” explosion protection equipment]
Figure Connection of a Module with Built-in Barrier (Compliant with CENELEC Standard) (2)
[Deleted Type “n” explosion protection equipment]
Figure Connection of a Type “n” Compliant Module (2) [Added note for safety barrier]
Figure Connection of an NI Compliant Module (1)
[Exchanged “Flameproof wiring” to “Wiring for Div.1/Div.2” and deleted note]
Figure Connection of an NI Compliant Module (2)
[Exchanged “Flameproof wiring” to “Wiring for Div.1/Div.2” and deleted note]
Overview of connecting N-IO components [Added]
3.1.1 Approved Types and Standards [Deleted Standards]
3.1.2 FM NI (FM Non-Incendive) [Exchanged CENELEC to ATEX]
3.2 Complied Standards [Deleted Standards]
4.1.1 Intrinsic Safety Explosion Protection of CENELEC Standard [Exchanged CENELEC to ATEX]
Appendix 3 Lists of Parameters of Modules with Built-in Barrier
Table List of Parameters (CENELEC) of Modules with Built-in Barrier
[Exchanged CENELEC to ATEX]

June 2015/16th Edition
1.4 Symbols That Indicate Specifications of Explosion Protection
[The example symbols and explanation is changed]
2.1 Explosion Protection Standards that CENTUM has Acquired
Table Explosion Protection Standards that CENTUM Complies
[A2BN5D is added]

2.3 Overview of Connecting CENTUM to the Devices Installed in a Hazardous Area
Figure Connection of a Type “n” Compliant Module (1)
[Explosion-proof wiring is changed]
Figure Connection of a Type “n” Compliant Module (2)
[Explosion-proof wiring is changed]
Figure Connection of an NI Compliant Module (1)
[Explosion-proof wiring is changed]
Figure Connection of an NI Compliant Module (2)
[Explosion-proof wiring is changed]
Overview of Connecting N-IO Components
[“Overview of Connecting barrier base plate (A2BN5D)” is added]
3.2.1 ATEX Type “n”
[Title name is changed and explosion-proof specification and number for A2BN5D are added]
3.2.2 IECEx Type “n”
[Explosion-proof specification and number for A2BN5D are added]
4.2 Intrinsic Safety Explosion Protection Instrumentation Using Barrier base plates
[Added]
Appendix 2.1 The List of ATEX Type “n” Compliant Products
[A2BN5D is added]
Appendix 2.2 The List of IECEx Type “n” Compliant Products
[A2BN5D is added]
Appendix 4. Lists of Parameters of Base Plate for Barrier (A2BN5D)
[“Table List of Parameters (ATEX) of Base Plate for Barrier (A2BN5D)” is added]
[“Table List of Parameters (IECEx) of Base Plate for Barrier (A2BN5D)” is added]

Aug. 2015/17th Edition
2.1 Explosion Protection Standards that CENTUM has Acquired
Table Explosion Protection Standards that CENTUM Complies
[Revised Conformed standard number, Added note]
3.2.1 ATEX Type “n”
[Revised Conformed standard number, Added note]
4.2.1 Explosion-proof Specifications and Complied Standard
[Added note]

Dec. 2015/18th Edition
Introduction Certification number is added
2.1 Explosion Protection Standards that CENTUM has Acquired
[N-IO related information is added]
Table Explosion Protection Standards that CENTUM Complies
[N-IO related information is added]
2.2 Explosion Protection Construction that I/O Devices of CENTUM Comply
[N-IO related information is added]
2.3 Overview of Connecting Non-Incendive Compliant FIO/RIO Module
[Title is changed]
Overview of Connecting A2BN3D adaptor base plate for ATEX and IECEx
[New addition]
Overview of Connecting A2BN3D adaptor base plate for FM and CSA
[New addition]
Overview of Connecting A2BN4D barrier base plate for ATEX and IECEx
[Title is changed]
Figure Connection of A2BN4D for ATEX and IECEx (2)
[New addition]
Figure Connection of A2BN5D for ATEX and IECEx (2)
[New addition]
Overview of Connecting A2BN5D barrier base plate for FM and CSA
[New addition]
3.1.1 CSA NI (CSA Non-Incendive)
[N-IO related information is added]
Approved Types and Standards
[Conformity standards for N-IO related components are added]
3.1.2 Complied Standards
[Conformity standards for N-IO related components are added]

3.2 Type “n”
[N-IO related information is added]
3.2.1 Complied Standards
[Conformity standards for N-IO related components are added]
3.2.2 Complied Standards
[Conformity standards for N-IO related components are added]
Figure Example of the configuration of Type “n” approved products 1
[IEC symbol is added]
Figure Example of the configuration of Type “n” approved products 2
[New addition]
Precautions
[Some precautions are added]
Figure Connecting ESB Bus Node Unit and a Device Installed in Zone 2
[IEC symbol is added]
Figure Installing ER Bus Node Unit in Zone 2 (Wiring by ER Bus)
[IEC symbol is added]
Figure Installing ER Bus Node Unit in Zone 2 (Wiring by Optical cable for ER Bus)
[IEC symbol is added]
Figure Installing Optical ESB Bus Node Unit in Zone 2 (Wiring by Optical cable for Optical ESB Bus)
[IEC symbol is added]
Figure Installing a FCS or ESB Bus Node Unit in Zone 2
[IEC symbol is added]
4.2.3 Intrinsic Safety Explosion Protection of FM Standard
[New addition]
4.2.4 Intrinsic Safety Explosion Protection of CSA Standard
[New addition]
Appendix 1. Table The List of CSA NI Compliant Products <for FIO/N-IO>
[N-IO related information is added]
Parameters of CSA NI Compliant Equipments
[“● N-IO” is added]
Appendix 1.2 Table The List of FM NI Compliant Products
[N-IO related information is added]
Parameters of FM NI Compliant Equipments
[“● FIO” and “● N-IO” are added]
Appendix 2. FM NI/CSA NI Control Drawing for CENTUM VP N-IO
[New addition]
Appendix 3. FM NI/CSA NI Control Drawing for A2BN5D
[New addition]
Appendix 4. Table The List of ATEX Type “n” Compliant Products
[N-IO related information is added]
Table The List of IECEx Type “n” Compliant Products
[N-IO/FIO related information is added]

Jan. 2016/19th Edition
Appendix 2. FM NI/CSA NI Control Drawing for CENTUM VP N-IO
[All replacement]
Appendix 3. FM NI/CSA NI Control Drawing for A2BN5D
[All replacement]

May 2016/20th Edition
Appendix 1. Table FIO Parameters (The Load Devices)
[Parameters of AAP135 are revised.]

July 2016/21st Edition
Introduction Certification number is added.
2.1 Descriptions for A2BN4D of "Table Explosion Protection Standards that CENTUM Complies" are added.
"Overview of Connecting A2BN4D barrier base plate for FM and CSA" is added.
3.1.1 Descriptions for A2BN4D of "CSA NI (CSA Non-Incendive)" are added.
Clerical error correction.
3.1.2 Descriptions for A2BN4D of "FM NI (CSA Non-Incendive)" are added.
Clerical error correction.

Appendix 1.1 Descriptions for A2BN4D of "Table The List of CSA NI Compliant Products <for FIO/N-IO>" are added.
Appendix 1.2 Descriptions for A2BN4D of "Table The List of FM NI Compliant Products" are added.
Appendix 3. "FM NI/CSA NI Control Drawing for A2BN4D" is added.

Apr. 2017/22nd Edition

Introduction [Revised descriptive texts]
Safety Precautions
■ Symbols in this Book
[Revisions of Symbols and Explanation]
■ Cautions for Safely Applying the Device
[Change symbols]
Trademarks ■ Trademarks
[Revised descriptive texts]
2.1 Table Explosion Protection Standards that CENTUM Complies
[Revised "Conformed standard number"]
3.1.1 ■ Approved Types and Standards
[Added A2MDV843 and Deleted A2ZN30D for "*1", "*4"]
■ Special Condition for Use
[Added A2MDV843]
■ Signal Wiring
[Change symbols]
3.1.2 ■ Special Condition for Use
[Added A2MDV843]
■ Precaution
[Change symbols]
3.2.1 ■ Complied Standards
[Revised "Conformed standard number"]
3.2.2 Figure Example of the configuration of Type “n” approved products 2
[Added A2MDV843 etc]
■ Precautions
● Maintenance and Repair
[Change symbols]
4.2 [Added descriptive texts for A2BN4D]
4.2.1 ■ Explosion-proof Specifications and Complied Standard
[Revised "Conformed standard number"]
Appendix 1.1 Table The List of CSA NI Compliant Products <for FIO/N-IO>
[Deleted A2ZN3D] [Added A2MDV843] [Correction of errors]
Table FIO Parameters (The Source Devices)
[Deleted "Note"]
● N-IO
[Added A2MDV843 for descriptive texts] [Correction of errors]
Appendix 1.2 Table The List of FM NI Compliant Products
[Deleted A2ZN3D] [Added A2MDV843] [Correction of errors]
● N-IO
[Added A2MDV843 for descriptive texts] [Correction of errors]
Appendix 2. FM NI/CSA NI Control Drawing for CENTUM VP N-IO
[Replacement Control Drawing]
Appendix 5.1 Table The List of ATEX Type “n” Compliant Products
[Added A2MDV843]
[Deleted : ADCV01, Terminal block, AECD4D, YCB301, YCB141, YCB311, YCB18, Signal cable]
Appendix 5.2 Table The List of IECEx Type “n” Compliant Products
[Added A2MDV843]
[Deleted A2ZN3D, ATF9S]

June 2017/23rd Edition

2.1 [Deleted the description of RIO and Built-in Barrier]
Table Explosion Protection Standards that CENTUM Complies
[Revised "Conformed standard number" for CSA]
2.2 [Deleted the description of Built-in Barrier]
Figure Example of Type "n" Standard Compliant Devices [Updated]

2.3 [Deleted the description of Built-in Barrier]
[Correction due to company name change of MTL]
3.1.1 [Deleted the description of RIO]
Approved Types and Standards
[Revised "Conformed standard number" for CSA]
Figure Example of the configuration of CSA NI approved products [Updated]
3.1.2 [Correction due to company name change of MTL]
3.2.1 [Deleted the description of Built-in Barrier]
4. [Deleted the description of RIO and Built-in Barrier]
[Correction due to company name change of MTL]
[Deleted Section 4.1: Intrinsic Safety Explosion Protection Instrumentation Using Module with Built-in Barrier]
Appendix 1.1 Table The List of CSA NI Compliant Products <for FIO/N-IO> [Updated models]
Table The List of CSA NI Compliant Products <for RIO> [Deleted the table]
Table FIO Parameters (The Source Devices) [Updated models]
Table FIO Parameters (The Load Devices) [Updated models]
Table Cable Parameter [Updated models]
● RIO [Deleted the tables for RIO]
Appendix 6. [Deleted Appendix 6.: Lists of Parameters of Modules with Built-in Barrier]
Appendix 7. Lists of Parameters of Base Plate for Barrier (A2BN5D) [Changed the Appendix number to 6]
Appendix 8. [Deleted Appendix 8.: Installation of I/O Modules with Built-in Barrier in accordance with FM Approval]
Appendix 9. [Deleted Appendix 9.: Example of Certificate]

Dec. 2017/24th Edition
Appendix 1.2 Table The List of FM NI Compliant Products [CP471 is added]
[Suffix code of AFV30☐ and A2FV50☐ is changed]
Table FIO Parameters (The Source Devices) [CP471 is added]
[Suffix code of AFV30☐ is changed]
Table FIO Parameters (The Load Devices) [CP471 is added]
[Suffix code of AFV30☐ is changed]
Appendix 5.1 Table The List of ATEX Type "n" Compliant Products [CP471 is added]
[Suffix code of AFV30☐ and A2FV50☐ is changed]
Appendix 5.2 Table The List of IECEx Type "n" Compliant Products [CP471 is added]
[Suffix code of A2FV50☐ is changed]

Dec. 2017/25th Edition
2.1 [Revised "Conformed standard number" for CSA]
3.1.1 [Revised "Conformed standard number" for CSA]

Jan. 2018/26th Edition
3.1.1 CSA NI(CSA Non-Incendive) [A2SAM105, A2SAM505, A2SAT105, A2SMX802 were added]
Appendix1.1 Lists of CSA NI Compliant Products and CSA NI Parameters [A2SAM105, A2SAM505, A2SAT105, A2SMX802 were added]
Appendix1.2 Lists of FM NI Compliant Products and FM NI Parameters [A2SAM105, A2SAM505, A2SAT105, A2SMX802 were added]
Appendix2. FM NI/CSA NI Control Drawing for CENTUM VP N-IO [A2SAM105, A2SAM505, A2SAT105, A2SMX802 were added]
Appendix5.1 The Lists of ATEX Type"n" Compliant Product [A2SAM105, A2SAM505, A2SAT105, A2SMX802, A2EXR001 were added]
Appendix5.2 The List of IECEx Type"n" Compliant Products [A2SAM105, A2SAM505, A2SAT105, A2SMX802, A2EXR001 were added]

May 2018/27th Edition
Introduction [Certificate No. NFM036-A101 was added.]
Safety Precautions ● Maintenance [Caution was added.]
1.3 ■ Classification by Explosion Protection Constructions [Correction of errors.]
● Classification of Hazardous Area [Correction of errors.]
● Classification of Explosive Gas [Correction of errors.]
2.1 Table Explosion Protection Standards that CENTUM Complies
[Applied standards of N-IO field enclosure were added.]

2.2 Explosion Protection Construction that I/O Devices of CENTUM Comply
[Description of N-IO field enclosure was added.]
2.3 ● Overview of Connecting A2BN3D adaptor base plate for FM and CSA
[Description of N-IO field enclosure was added.]
3.1.1 CSA NI (CSA Non-Incendive) [Description of N-IO field enclosure was added.]
■ Approved Types and Standards [Applied standards of N-IO field enclosure were added.]
■ Special Condition for Use [A2MDV843 was added.]
■ Precautions in Use [Description of N-IO field enclosure was added.]
■ Power Supply Wiring [Description of N-IO field enclosure was added.]
■ Signal Wiring [Description of N-IO field enclosure was added.]
■ Signal Wiring [Warning of N-IO field enclosure was added.]
3.1.2 FM NI FM Nonincendive [Description of N-IO field enclosure was added.]
■ Complied Standards [Applied standards of N-IO field enclosure were added.]
■ Device Installation [Description of N-IO field enclosure was added.]
■ Power Supply Wiring [Description of N-IO field enclosure was added.]
■ Signal Wiring [Description of N-IO field enclosure was added.]
■ Precaution [Warning of N-IO field enclosure was added.]
3.2.2 ● Installation [Description of field wiring installation was added.]
● Maintenance and Repair [Description of field wiring installation was deleted.]
Appendix 1.1 Table The List of CSA NI Compliant Products <for FIO/N-IO>
[A2NN70D, A2NN60D, and A2CB60 were added.]
Table Cable Parameter [Parameter of AKB336 was deleted.]
● N-IO [A2NN70D and A2NN60D were added.]
Appendix 1.2 Table The List of FM NI Compliant Products
[A2NN70D, A2NN60D, and A2CB60 were added.]
Table Cable Parameters [Parameter of AKB336 was deleted.]
● N-IO [A2NN70D and A2NN60D were added.]
Appendix 2. FM NI/CSA NI Control Drawing for CENTUM VP N-IO
[Control Drawing of N-IO field enclosure was added.]

Oct. 2018/28th Edition
2.1 Table Explosion Protection Standards that CENTUM Complies (1/2) [Note for referring to GS was revised.]
Table Explosion Protection Standards that CENTUM Complies (2/2) [Note for referring to GS was revised.]
3.2.1 ■ Complied Standards[Note for referring to GS was revised.]
4.1.1 ■ Explosion-proof Specifications and Complied Standard [Note for referring to GS was revised.]
Appendix 1. Lists of NI Compliant Products and NI Parameters [Note for referring to GS was added.]
Appendix 2. FM NI/CSA NI Control Drawing for CENTUM VP N-IO [Replacement Control Drawing]
Appendix 5. Lists of Type “n” Compliant Product [Note for referring to GS was added.]

Mar. 2020/29th Edition
2.1 Table Explosion Protection Standards that CENTUM Complies [Correction of errors.]
3.1.1 ■ Approved Types and Standards [A2BM4 was added to *1 and *4.]
Appendix 1.1 Table The List of CSA NI Compliant Products <for FIO/N-IO> [A2BM4 and AKB651 were added. A2BN3D and AKB331 were revised.]
● N-IO [Table of Cable Parameter was added.]
Appendix 1.2 Table The List of FM NI Compliant Products [A2BM4 and AKB651 were added. A2BN3D and AKB331 were revised.]
● N-IO [Table of Cable Parameter was added.]
Appendix 2. FM NI/CSA NI Control Drawing for CENTUM VP N-IO [Control Drawing(NIE008) was replaced to new revision.]
Appendix 5.1 Table The List of ATEX Type "n" Compliant Products [A2BM4 was added.]
Appendix 5.2 Table The List of IECEx Type "n" Compliant Products [A2BM4 was added.]

July 2020/30th Edition
Compliance with ECAS-Ex Type "n"
2.1 ECAS-Ex Type “n” was added to table of Explosion Protection Standards that CENTUM Complies.
3.2.3 ECAS-Ex Type "n" was added.
Appendix 5.3 ECAS-Ex Type “n” Compliant Products was added.

Jan . 2021/31th Edition

2.1 Table Explosion Protection Standards that CENTUM Complies (1/2)
[N-IO field enclosure was revised.]
Table Explosion Protection Standards that CENTUM Complies (2/2)
[N-IO field enclosure was revised.]

2.3 Overview of Connecting CENTUM to the Devices Installed in a Hazardous Area
[N-IO field enclosure was added.]

3.1.2 Complied Standards [N-IO field enclosure was revised.]

3.2.1 Complied Standards [N-IO field enclosure was revised.]

3.2.2 Complied Standards [N-IO field enclosure was revised.]

Appendix 1.1 Table The List of CSA NI Compliant Products <for FIO/N-IO>
[N-IO field enclosure was revised.]

Appendix 1.2 Table The List of FM NI Compliant Products
[N-IO field enclosure was revised.]

Appendix 2. FM NI/CSA NI Control Drawing for CENTUM VP N-IO [Control Drawing(NIE008) was replaced to new revision.]

Appendix 5.1 Table The List of ATEX Type "n" Compliant Products
[N-IO field enclosure was added.]

Appendix 5.2 Table The List of IECEx Type "n" Compliant Products
[N-IO field enclosure was added.]

Written by Yokogawa Electric Corporation

Published by Yokogawa Electric Corporation
2-9-32 Nakacho, Musashino-shi, Tokyo 180-8750, JAPAN